3. igubal®

Self-aligning rod ends-, pillow block- and flange bearings

...plastics

Application Examples: igubal®

Exciting applications can be viewed online at ► **www.igus.co.uk/igubal-applications**

LIMELIGHT BV

Stadium paneling igubal® spherical bearings of dimension series K are used in the main bearing assembly of every individual slat owing to their freedom from maintenance, corrosion resistance and atmospheric resistance. Since these slats can be swiveled, this allows the air flow inside the stadium to be regulated. Part number: igubal® spherical bearing KGLM-08

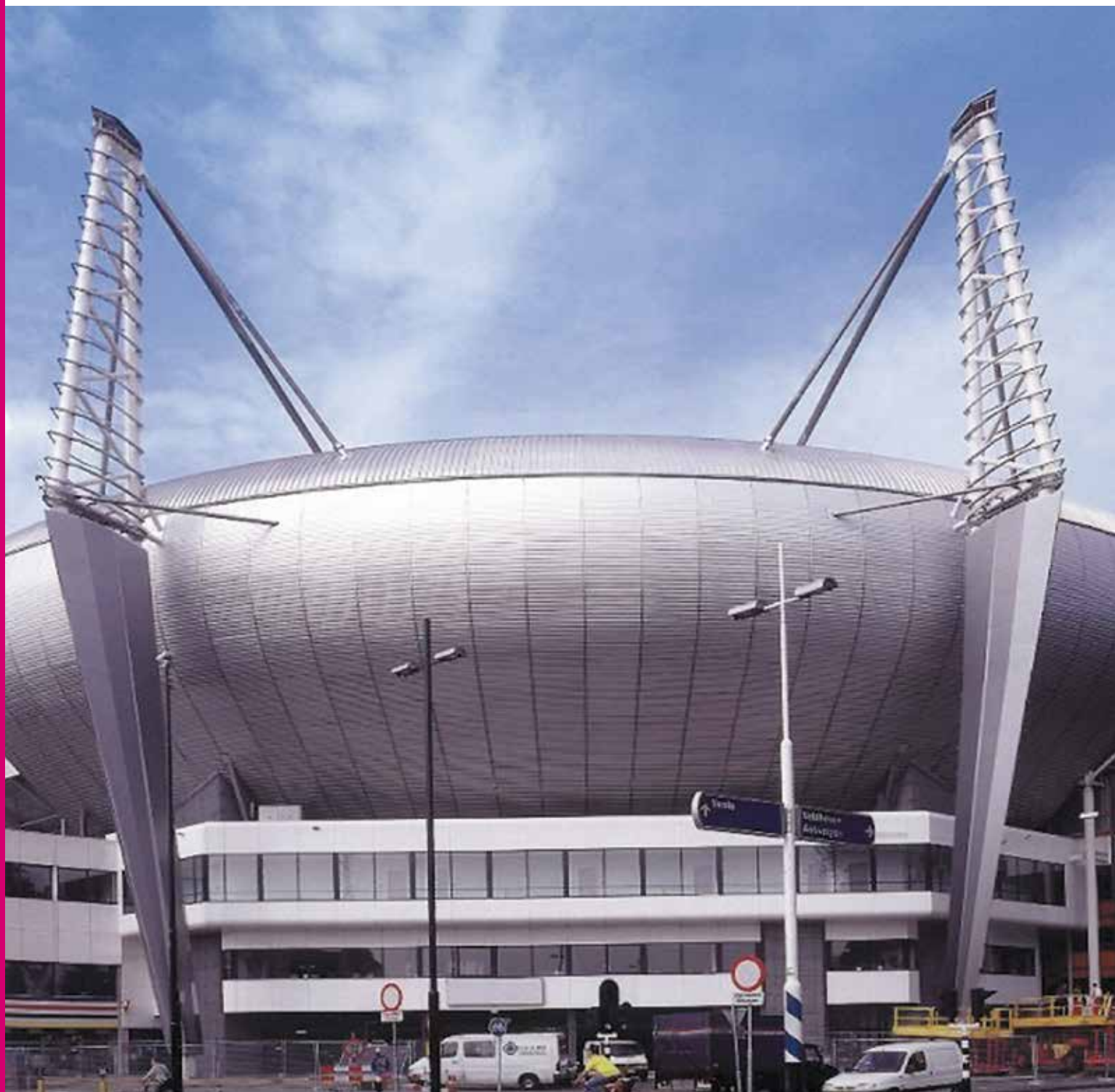

RESEARCH INSTITUTE
Mirror adjustment of the telescope is performed virtually free of backlash with igubal® flange bearings. Magnetic influences can be avoided.
(Max-Planck Institut for physics and astrophysics)

SPECIAL-PURPOSE VEHICLE
Insensitive to dirt and maintenance-free: The rugged clevises and spherical bearings never give in on the special-purpose municipal vehicles.
(Multicar Spezialfahrzeuge GmbH)

PACKAGING MACHINE
Long service life and, at the same time, food-safe design have been implemented in this application with igubal® rod ends.
(Leeb GmbH)

CARAVAN STEP
Rugged, insensitive to dirt and vibration-dampening igubal® rod ends withstand the loads even in worst-case conditions.
(Hymer AG)

TEXTILE INDUSTRY
Concentricity errors and jolts are compensated by means of spherical clevises in the support of the thread guide unit more efficiently than the alternative metal product.
(Sahm GmbH & Co. KG)

CHOCOLATE DECORATION SYSTEM
Decoration without grease by using maintenance-free igubal® rod ends turn all the sweets into sheer enjoyment.
(Wolf Spezialmaschinen GmbH)

igubal® Selection | Product Overview

Rod Ends
▶ from page 633

KBRM/KBLM
Series K
female thread right/left; metric
(metal insert optional)
▶ page 638

KBRM CL
KBLM CL
Series K
female thread right/left; metric
▶ page 640

KCRM/KCLM
Series K
female thread right/left; metric
(metal insert optional)
▶ page 641

KARM/KALM
Series K
male thread right/left; metric
(metal insert optional)
▶ page 642

KBRI/KBLI
Series K
female thread right/left; Inch
▶ page 652

KARI/KALI
Series K
male thread right/left; Inch
▶ page 654

EBRI/EBLI
Series E
female thread right/left; Inch
▶ page 656

WGRM
WGLM
right/left
metric
▶ page 658

Clevis Joints
▶ from page 663

GERM/GELM
Series E
metric
▶ page 668

GERMK/GELMK
Series E
metric
▶ page 670

GERMF/GELMF
Series E
metric
▶ page 671

GERMKE
GELMKE
Series E
metric
▶ page 672

Pillow Block Bearings
▶ from page 677

KSTM
Series K
metric
▶ page 682

KSTI
Series K
Inch
▶ page 682

KSTM-GT
Series K
metric
▶ page 684

ESTM
Series E
metric
▶ page 685

Flange Bearings
▶ from page 689

EFOM
2-holes
Series E
metric
▶ page 694

EFSM
4-holes
Series E
metric
▶ page 696

KFSM-GT
4-holes
Series K
metric
▶ page 698

EFOM HT
2-holes
Series E
metric
▶ page 699

Pressfit Spherical Bearings
▶ from page 701

KGLM
Series K
metric
▶ page 706

KGLM LC
Low Cost
Series K
metric
▶ page 707

KGLM SL
Slim line
Series K
metric
▶ page 708

KGLM H
Soft Touch
Series K
metric
▶ page 709

Thrust Bearings
▶ from page 721

SAM
metric
▶ page 724

Spherical Balls
▶ from page 725

Detectable
▶ from page 737

KBRM-CL-DT
KBLM-CL-DT
Series K; female thread right/left; metric
▶ page 740

EBRM-DT
EBLM-DT
Series E; female thread right/left; metric
▶ page 741

GERM-DT
GELM-DT
Series E
metric
▶ page 742

GEFM-DT
Series E
metric
▶ page 744

KARM CL
Series K
male thread
right; metric

▶ page 644

EBRM/EBLM
Series E
female thread right/
left; metric

▶ page 646

EARM/EALM
Series E
male thread right/left;
metric

▶ page 648

EBRM HT
EBLM HT
Series E, female thread
right/left; metric

▶ page 650

EARM HT
EALM HT
Series E, male thread
right/left; metric

▶ page 651

WGRM LC
WGLM LC
right/left
metric

▶ page 659

AGRM
AGLM
right/left
metric

▶ page 660

AGRM-LC
AGLM-LC
right/left
metric

▶ page 661

PKRM/PKLM
Series K
right/left
metric

▶ page 662

GERMFE
GELMFE
Series E
metric

▶ page 673

GEFM
Spring-loaded
fixing clip
metric

▶ page 674

GBM
Clevis pin
metric

▶ page 675

GSR
Circlip
metric

▶ page 675

ESTM-GT
Series E
metric

▶ page 686

ESTM-SL
Series E
metric

▶ page 687

AD-01-ESTM
Series E
metric

▶ page 688

EFSM HT
4-holes
Series E
metric

▶ page 700

KGLI
Series K
Inch

▶ page 710

EGLM
Series E
metric

▶ page 711

EGLM-LC
Low Cost
Series E
metric

▶ page 712

ECLM
Series E
metric

▶ page 713

ECLM-HD
Heavy Duty
Series E
metric

▶ page 714

EGFM-... T
Series E
metric

▶ page 715

EGZM
Series E
metric

▶ page 716

WDGM
metric
KDGM
Series K
metric

▶ page 718–719

WKM/WKI
Series K
metric/Inch

▶ page 729

WEM/WEI
Series, E
metric/Inch

▶ page 729

RKM/REM
Series K, E
metric

▶ page 730

XKM/XEM
Series K, E
metric

▶ page 731

JKM/JEM
Series K, E
metric

▶ page 732

J4KM/
J4EM
Ser. K, E; metric

▶ page 733

UWEM
Series E
metric

▶ page 734

J4VEM
Series E
metric

▶ page 735

RN248KM
RN48EM
Series K, E; metric

▶ page 736

GERMF-DT
GELMF-DT
Series E
metric

▶ page 745

igubal®

igubal® – self-aligning maintenance-free plain bearings made of high performance polymers

igubal® puts a complete system of self-aligning bearings – spherical bearings, pillow block spherical bearings and rod ends – at the developer's fingertips. Self-aligning bearings are easy to fit, adapt to all angular deviations and replace special housings in many cases.
With igubal®, the user can take advantage of all the benefits of high performance polymers: vibration dampening, ability to operate in liquids or chemicals, and resistance to dirt and dust, which can impede the performance of greased metal components.
The weight of the igubal parts is approx. 80 % lighter than comparable steel parts. Additional savings are cost-savings at the time of purchasing and during operation and on installation space due to their small dimensions. igubal® bearings are also extremely cost competitive due to the elimination of maintenance and installation costs.
igubal® self-aligning bearings are made of a polymer housing for high strengths and a spherical ball made of maintenance-free self-lubricating high performance polymers.

igubal® Spherical Balls:

- Exceptionally cost-effective
- Maintenance-free
- Lubrication-free
- Insensitive to dust and dirt
- Corrosion-resistant
- Can be used in liquid media
- Vibration-dampening
- Inner race set in housings with very low clearance
- Dirt can become embedded for shaft protection
- Light weight
- Temperature resistance up to +200 °C, depending on the material

igubal® Spherical

In standard spherical bearings, the spherical ball is made of iglidur® W300 material, which is known for its low coefficient of friction while running dry and extremely low tendency to stickslip. This is especially important for low loads and very slow movements.

▶ More information about iglidur® W300, **page 135**

Taking advantage of its long experience in polymers and based on several tests, igus® decided in the last years to respond more precisely to the different applications and customers requests by developping spherical balls in other iglidur® materials.
Further to the standard material iglidur® W300, spherical balls are now available in 7 other materials presenting particular advantages:

- iglidur® X for high temperatures
- iglidur® J for low moisture absorption
- iglidur® J4 for low moisture absorption at lower costs
- iglidur® R as a low-cost alternative
- iglidur® UW for under water applications
- iglidur® RN248 as detectable material
- iglidur® J4 with clearance-free spherical balls

▶ Spherical balls, **page 728**

Do not hesitate to ask for technical support concerning the choice of the material. Please contact igus®.

igubal® Housing

There are three housing materials available, each of them offering particular advantages:

- Standard housings made of igumid G, a highly shock-resistant, long-fibre reinforced polymer. Temperature range: from –30 °C to +80 °C
- High temperature housings made of iguton G, high degree of chemical resistance, suitable for temperatures from –40 °C to +200 °C
- Detectable housings made of RN246 material

▶ Material Table, **page 1127**

Areas of Application:

igubal® bearing elements can be used without problems even in harsh environments. In moist or wet environments, the bearings are corrosion resistant, and resistant to weak acids and alkalines. The application temperatures range is from –30 °C to +200 °C. Resistance to dirt and dust is outstanding. Seals are not necessary, even in extremely contaminated conditions. This is true for fine dust as well as coarse dirt, which is present in agricultural equipment. The housing is made of an impact-resistant composite material which tolerates high alternating loads.

Detectable

Made of the special materials RN248 for the spherical ball and RN246 for the housing, the parts of metal detectable igubal® polymer bearings can be verified as foreign particles with all common parameters used in the metal detection technology and thus ensure safe food.

▶ igubal® detectable program, **page 737**
▶ Material Table, **page 1129**

igubal® | Technical Data

Load

The load capacity of the maintenance-free igubal® bearing element parts is very high at normal ambient temperatures. igubal® bearings absorb high forces and weigh only one fifth of traditional, metal bearing housings. The excellent dampening properties are based on the fact that the polymer material of the two part bearing can absorb vibrations differently than steel.
However, plastic specific properties, such as dependence on temperature and behaviour under long-term stress, must be taken into consideration when using igubal® bearings. The load capacity of the rod end should therefore be checked in a practical test, particularly if it will be used under continuous high loads and at elevated temperatures.

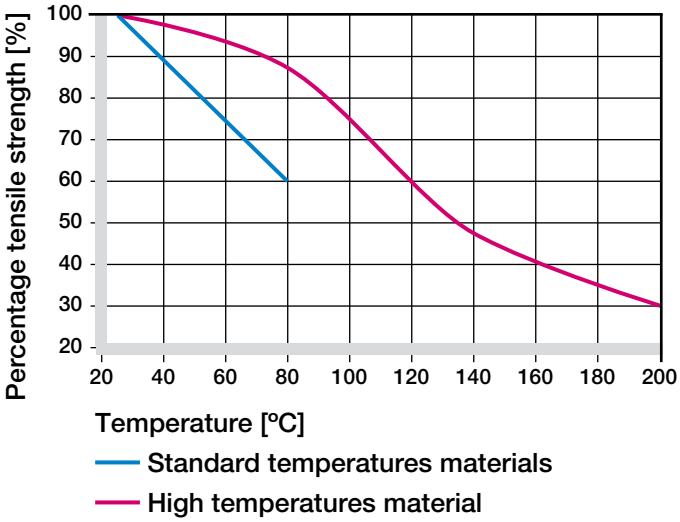

Diagram 01: trends indicate the effect of temperature on the max. load capacity of igubal® bearings.

Coefficients of Sliding Friction and Speed

One important advantage of igubal® spherical bearings is that rapid, rotary movements of a mounted shaft take place directly in the spherical portion, made of iglidur® W300. In metallic rod ends, rotary motion takes place between the race and the spherical bearing. High speeds can be achieved with igubal® bearings.
igubal® bearings are used in such a way that the angular movements of the spherical bearings take place at the outer diameter. By contrast, rotations of the shaft are supported directly in the inner diameter of the spherical portion. The advantage therefore lies in the polymer vs. steel relationship. Polymer produces lower friction and permits high speeds, even when running dry.

Application Temperatures

igubal® standard bearing elements can be used in temperatures from –30 °C to +80 °C. The HT-versions can be used at continuous temperatures up to +200 °C. Diagram 01 trends indicate the effect of temperature on the load capacity of igubal® bearings with standard and high temperature materials.

igubal	Application Temperatures	
	Standard	HT-Version
Minimum	–30 °C	–40 °C
Maximum, long term	+80 °C	+200 °C
Maximum, short term	+120 °C	+240 °C

Tabelle 01: Application temperatures of igubal® bearings

Thread Description	Pitch [mm]
M2	0.40
M3	0.50
M4	0.70
M5	0.80
M6	1.00
M8	1.25
M10	1.50
M10 F	1.25
M12	1.75
M12 F	1.25
M14	2.00
M16	2.00
M16 F	1.50
M18	1.50
M20	1.50
M20 M20	2.50
M22	1.50
M24	2.00
M27	2.00
M30	2.00

Table 02: Thread pitches of igubal® rod ends and clevis joints

Chemical Resistance of igubal® bearings

iglidur® W300 and the housing made of igumid G are resistant to weak alkalines, weak acids and fuels, as well as all types of lubricants. The HT-versions can be used for applications with a higher chemical demand.
The moisture absorption of igubal® depends on the choice of material. The moisture absorption of igubal® is approximately 1.3 % of weight in standard atmosphere. The saturation limit in water is 6.5 %. This must be taken into evaluation for applications. If a lower moisture absorption is essential, a look on to the different materials is helpfull.

▶ Chemical table, **page 1127**

igubal® | Technical Data

Medium	Resistance	
	Standard	HT-Version
Alcohol	+ to 0	+
Hydrocarbons	+	+
Greases, oils without additives	+	+
Fuels	+	+
Diluted acids	0 to –	+ to 0
Strong acids	–	+ to –
Diluted alkalines	+	+
Strong alkalines	0	+

Table 03: Chemical resistance of igubal® plain bearings
+ resistant 0 conditionally resistant – not resistant
All data given at room temperature [+20 °C]

Radiation Resistance

Self-aligning igubal® plain bearings are resistant to radiation up to an intensity of $3 \cdot 10^2$ Gy.

UV Resistance

The corrosion resistance of igubal® bearings gives them special value for outside applications. igubal® bearings are permanently resistant to UV radiation. A small change in colour (dark coloration) of the spherical ball due to UV radiation does not affect the mechanical, electrical or thermal properties.

Tolerances

igubal® spherical bearings can be used with different tolerances according to each application. They are designed with a large clearance in the standard product, which enables a secure operation even under high peripheral speeds. The inside diameter of the spherical ball has a tolerance of E10. The shafts should have tolerances between h6 and h9. The tolerances are provided in the table below. Please contact us in case you require lower or other bearing tolerances.

Basic size [mm]	Tolerance	
	Gauge falls	Gauge hangs
to 3	x,01	x,05
> 3 to 6	x,02	x,07
> 6 to 10	x,02	x,08
> 10 to 18	x,03	x,10
> 18 to 30	x,04	x,12
> 30 to 50	x,05	x,15

Table 04: Tolerances of inner diameter (spherical balls)

Check the Inner Diameter

Inadequate test equipment; plug gauge too short

Wrong test equipment; caliper

Tolerance test with gauge

Service Life Calculation

The igubal® expert allows to check the suitability of igubal® bearings for every application. You can choose from different igubal® bearings and specific load (radial, axial or static, cyclic and dynamic). The expert system will calculate from these input data:

- The bearing wear
- The theoretical service life

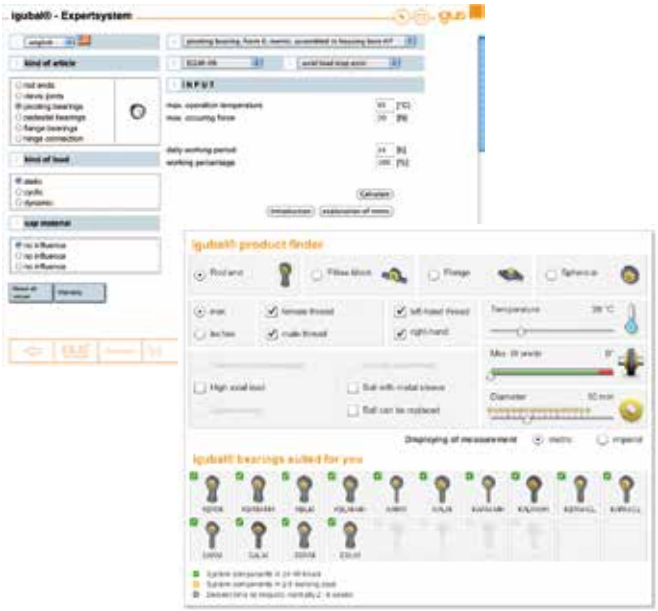

igubal® Expertsystem
▶ www.igus.co.uk/igubal-expert
igubal® productfinder
▶ www.igus.co.uk/igubal-productfinder

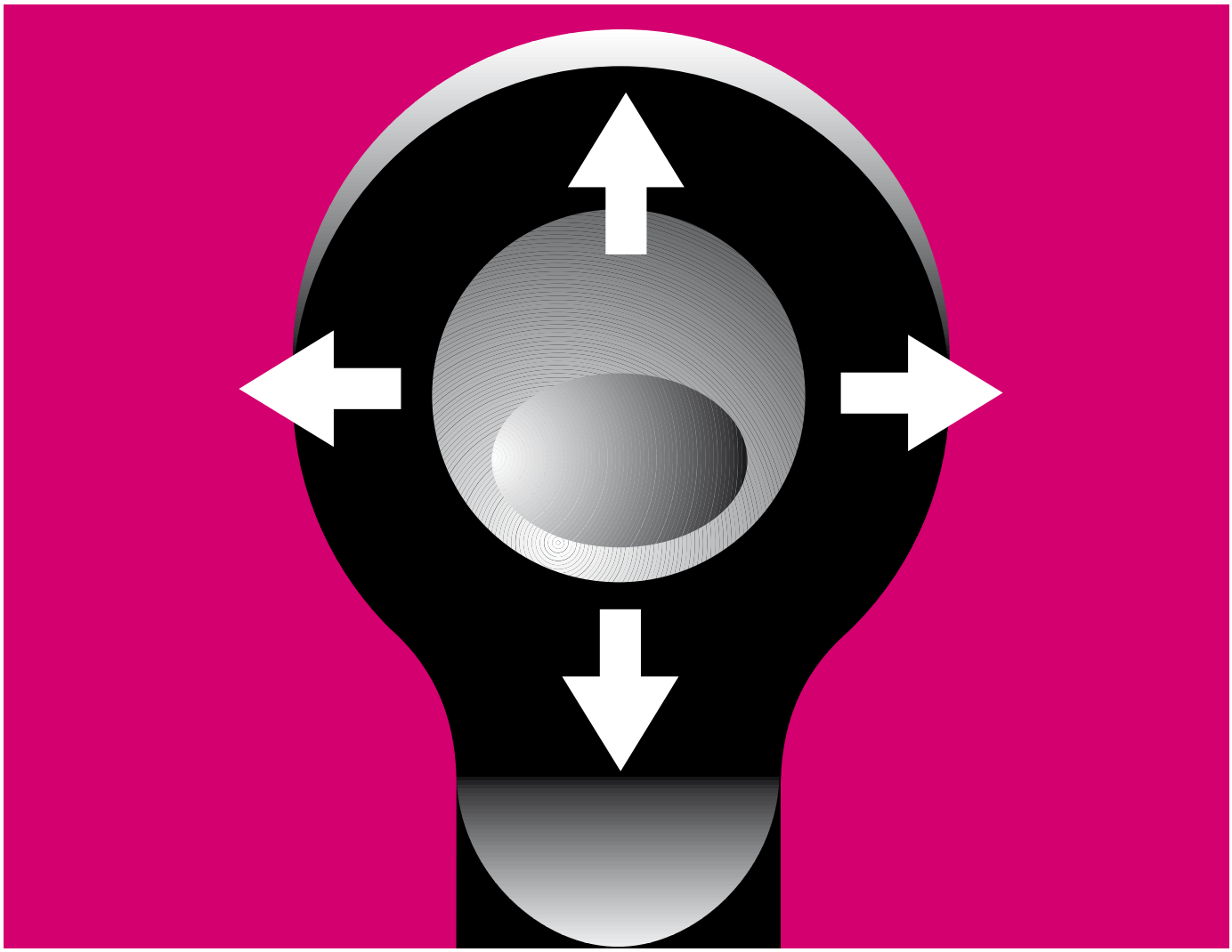

igubal® Rod Ends

- Maintenance-free, self-lubricating
- High strength under impact loads
- High tensile strength
- Compensation of misalignment
- Compensation of edge loads
- Very low weight

igubal® Rod Ends

igubal® rod ends can also be used in rough environments. They are corrosion-resistant in humid environments and resistant to weak acids and bases. The operation temperature is from –40 °C up to +80 °C. Rod ends are also insensitive to dirt and dust.

Maintenance-free, dry-running

High strength under impact loads

High tensile strength

Compensation of misalignment

Compensation of edge loads

Low weight

When to use it?

- If you want to save weight
- For rotating, oscillating and linear movements
- If high-frequency oscillations/vibrations occur
- If silent operation is required
- If you need an electrically insulating part
- If corrosion resistance is required
- In combination with pneumatic cylinders and gas struts
- If chemical resistance is required
- If high stiffness is required

When not to use it?

- If temperatures are higher than +80 °C
  ▶ HT version, page 650–651
- If rotation speeds higher than 0.5 m/s are required
- If really high tensile and shear loads occur
- With a hydraulic cylinder
- If dimensions above 30 mm are required

Temperature

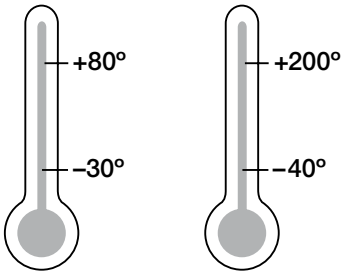

Standard High temperature

Product range

18 types
Ø 2–30 mm

igubal® Rod Ends | Application Examples

Typical sectors of industry and application areas

- Bicycle manufacturing
- Plant design ● Packaging
- Offshore etc.

Improve technology and reduce costs – 110 exciting examples online

▶ **www.igus.co.uk/igubal-applications**

▶ **www.igus.co.uk/bikes**

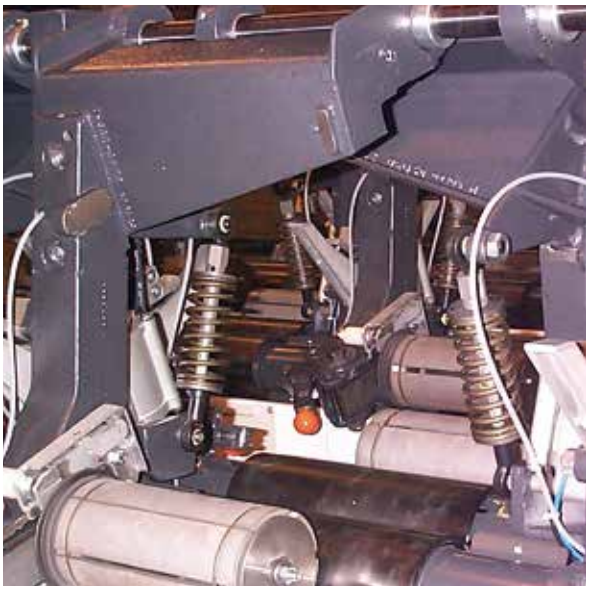

▶ **www.igus.co.uk/textile**

▶ **www.igus.co.uk/packaging**

▶ **www.igus.co.uk/offshore**

igubal® Rod Ends | Technical Data

Advantages

- Maintenance-free
- High strength under impact loads
- Very high tensile strength for varying loads
- Compensation of misalignment
- Compensation of edge loads
- Insensitive to dirt, dust and lint
- Corrosion- and chemical-resistant
- High vibration-dampening
- Suitable for rotating, oscillating and linear movements
- Light weight
- Dimensional series K and E, according to standard DIN ISO 12240
- Available with a metal sleeve to take a higher torque

Loads

igubal® rod ends handle high loads at normal room temperatures, have excellent dampening properties and weigh only a fifth of traditional metallic rod ends. In applications with high continuous loads and high temperatures, the load capacity of igubal® rod ends should be tested in an experiment that simulates the application.

Coefficients of Friction and Speed

One important advantage of igubal® spherical bearings is that rapid, rotary movements of a mounted shaft take place directly between the shaft and the iglidur® plain spherical bearing. In metallic rod ends, rotary motion takes place between the race and the spherical bearing. High speeds can sometimes be achieved with igubal® bearings.

Product Range

igubal® rod ends are available in the dimensional series K and E for shaft diameters of 2 to 30 mm.

- Form A – with male thread and
- Form B – with female thread

The dimensional series K and partially E are available in imperial dimensions, as well as a special version containing a stainless steel sleeve in the inner race. This allows a significantly higher torque than for the standard polymer race. Please ask us for more dimensons.

Temperatures

The igubal® rod ends can be used in temperatures from –30 °C up to +80 °C. The igubal® rod ends made of HT-Material are suitable for temperatures up to +200 °C (Series E, types A and B).

Standard parts

igubal® rod ends can be used at different tolerances depending on the individual application. In standard form, they are designed with a large amount of bearing clearance, which permits reliable operation even at high rotational speeds. The bore of the inner race is produced to a standard tolerance range. Shafts should also meet recommended tolerances. Please contact us if you have any questions regarding tolerances.

Pivot angle

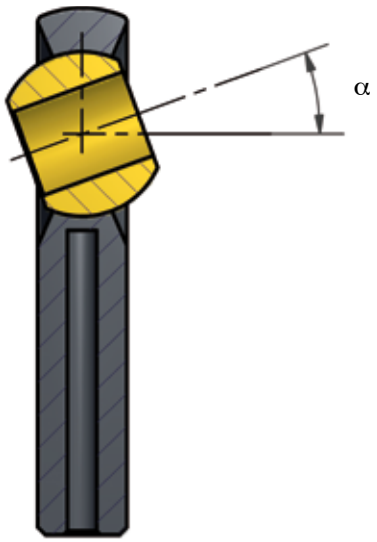

igubal® Rod Ends | Product Overview

igubal® rod ends with female thread

KBRM
KBLM
Series K
Standard design
(metal insert optional)

▶ from page 638

KBRM CL
KBLM CL
Series K
with lock nut (metal
insert optional)

▶ page 640

KCRM
KCLM
Series K
(metal insert optional)

▶ page 641

EBRM
EBLM
Series E

▶ from page 646

EBRM HT
EBLM HT
Series E
High temperature

▶ page 650

KBRI
KBLI
Series K
Version with
inch dimensions

▶ from page 652

EBRI
EBLI
Series E
Version with
inch dimensions

▶ from page 656

igubal® rod ends with male thread

KARM
KALM
Series K
Standard design
(metal insert optional)

▶ from page 642

KARM CL
Series K
2nd generation
(metal insert optional)

▶ page 644

EARM
EALM
Series E

▶ from page 648

EARM HT
EALM HT
Series E
High temperature

▶ page 651

KARI
KALI
Series K
Version with
inch dimensions

▶ from page 654

igubal® accessories for rod ends

PKRM
PKLM
Series K
Adapter bolt
with circlip

▶ page 662

GERMK
GELMK
Series E

▶ page 670

GERMF
GELMF
Series E

▶ page 671

WGRM
WGLM
Angle joint

▶ page 658

WGRM-LC
WGLM-LC
Low-cost
Angle joint

▶ page 659

AGRM
AGLM
In line ball and
socket joint

▶ page 660

AGRM-LC
AGLM-LC
In line ball and
socket joint

▶ page 661

igubal® Rod Ends | Product Range

Rod ends with female thread: KBRM and KBLM

Standard design

Design with metal sleeve (MH)

- Maintenance-free, self-lubricating
- High strength under impact loads
- Very high tensile strength for varying loads
- Compensation of misalignment
- Compensation of edge loads
- Insensitive to dirt, dust and lint
- Corrosion- and chemical-resistant
- High vibration-dampening
- Suitable for rotating, oscillating and linear movements
- Very low weight
- Dimensional series K according to standard DIN ISO 12240
- Available with a metal sleeve for a higher torque

Technical Data

Part number		Max. static tensile strength		Max. static radial load		Min. thread depth	Max. torque strength	Max. torque through ball		Weight
Right-hand thread	Left-hand thread	Short term [N]	Long term [N]	Short term [N]	Long term [N]	Thread [mm]	Inner threading [Nm]	Standard without MH [Nm]	Standard with MH [Nm]	[g]
KBRM-02	**KBLM-02**	200	100	50	25	4	0.30	1	–	0.4
KBRM-03	**KBLM-03**	800	400	100	50	5	0.50	2	4	2.7
KBRM-05 M4	**KBLM-05 M4**	1,000	500	250	125	7	0.75	5	12	3.5
KBRM-05	**KBLM-05**	1,000	500	250	125	7	1.00	5	12	3.4
KBRM-06	**KBLM-06**	1,400	700	400	200	8	1.50	10	15	4.7
KBRM-08	**KBLM-08**	2,100	1,050	700	350	11	5.00	12	40	8.6
KBRM-10	**KBLM-10**	3,100	1,550	800	400	13	15.00	20	50	14.6
KBRM-10 F	**KBLM-10 F**	3,100	1,550	800	400	13	6.00	20	50	14.6
KBRM-12	**KBLM-12**	3,600	1,800	900	450	15	20.00	30	70	22.0
KBRM-12 F	**KBLM-12 F**	3,600	1,800	900	450	15	15.00	30	70	22.0
KBRM-14	**KBLM-14**	4,000	2,000	1,000	500	17	25.00	35	75	30.9
KBRM-16	**KBLM-16**	4,200	2,100	1,300	650	19	30.00	40	110	39.6
KBRM-16 F	**KBLM-16 F**	4,200	2,100	1,300	650	19	27.50	40	110	39.6
KBRM-18	**KBLM-18**	4,600	2,300	1,600	800	21	45.00	45	150	55.0
KBRM-20	**KBLM-20**	5,400	2,700	2,100	1,050	22	60.00	55	200	73.5
KBRM-20 M20	**KBLM-20 M20**	5,400	2,700	2,100	1,050	22	60.00	55	200	73.5
KBRM-22	**KBLM-22**	7,000	3,500	2,200	1,100	25	75.00	60	–	94.8
KBRM-25	**KBLM-25**	8,500	4,250	2,300	1,150	28	120.00	60	–	119.8
KBRM-30	**KBLM-30**	10,500	5,250	2,500	1,250	34	135.00	60	–	177.0
KBRM-30 M27x2	**KBLM-30 M27x2**	10,500	5,250	2,500	1,250	34	135.00	60	–	189.6

igubal® Rod Ends | Product Range

Rod ends with female thread: KBRM and KBLM

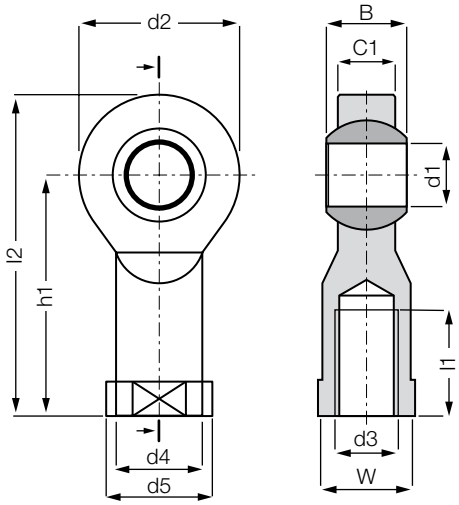

Order key

KB…M-02

- Dimension
- Metric
- Thread
- L = left-hand thread
- R = right-hand thread
- Housing (female thread)
- Dimensional series K

Material:
Housing: **igumid G** ▶ **page 1127**
Spherical ball: **iglidur® W300** ▶ **page 729**

Dimensions [mm]

Part number Right-hand thread	Part number Left-hand thread	d1 E10	d2	d3	d4	d5	C1	B without MH	B with MH ±0.2	h1	l1	l2	W	Max. pivot angle
KBRM-02	**KBLM-02**	02	9	M02	4.0	4.6	3.0	4	4.1	12.5	6	17	SW04	30°
KBRM-03	**KBLM-03**	03	13	M03	6.5	8.0	4.5	6	6.1	18.5	8	25	SW06	30°
KBRM-05 M4	**KBLM-05 M4**	05	18	M04	9.0	12.0	6.0	8	8.1	27	10	36	SW09	30°
KBRM-05	**KBLM-05**	05	18	M05	9.0	12.0	6.0	8	8.1	27	10	36	SW09	30°
KBRM-06	**KBLM-06**	06	20	M06	10.0	13.0	7.0	9	9.2	30	12	40	SW11	29°
KBRM-08	**KBLM-08**	08	24	M08	13.0	16.0	9.0	12	12.2	36	16	48	SW14	25°
KBRM-10	**KBLM-10**	10	30	M10	15.0	19.0	10.5	14	14.2	43	20	58	SW17	25°
KBRM-10 F	**KBLM-10 F**	10	30	M10 x 1.25	15.0	19.0	10.5	14	14.2	43	20	58	SW17	25°
KBRM-12	**KBLM-12**	12	34	M12	18.0	22.0	12.0	16	16.2	50	22	67	SW19	25°
KBRM-12 F	**KBLM-12 F**	12	34	M12 x 1.25	18.0	22.0	12.0	16	16.2	50	22	67	SW19	25°
KBRM-14	**KBLM-14**	14	38	M14	20.0	25.0	13.5	19	19.2	57	25	76	SW22	25°
KBRM-16	**KBLM-16**	16	42	M16	22.0	27.0	15.0	21	21.2	64	28	85	SW22	23°
KBRM-16 F	**KBLM-16 F**	16	42	M16 x 1.5	22.0	27.0	15.0	21	21.2	64	28	85	SW22	23°
KBRM-18	**KBLM-18**	18	46	M18 x 1.5	25.0	31.0	16.5	23	23.2	71	32	94	SW27	23°
KBRM-20	**KBLM-20**	20	50	M20 x 1.5	28.0	34.0	18.0	25	25.3	77	33	102	SW30	23°
KBRM-20 M20	**KBLM-20 M20**	20	50	M20 x 2.5	28.0	34.0	18.0	25	25.3	77	33	102	SW30	23°
KBRM-22	**KBLM-22**	22	56	M22 x 1.5	30.0	37.0	20.0	28	–	84	37	112	SW32	22°
KBRM-25	**KBLM-25**	25	60	M24 x 2.0	32.0	41.0	22.0	31	–	94	42	124	SW36	22°
KBRM-30	**KBLM-30**	30	70	M30 x 2.0	37.0	50.0	25.0	37	–	110	50	145	SW41	22°
KBRM-30 M27x2	**KBLM-30 M27x2**	30	70	M27 x 2.0	37.0	50.0	25.0	37	–	110	50	145	SW41	22°

For rod ends with **metal insert** please add **MH** to the part number. Example: KRBM-10 **MH (Inner-Ø: 10 mm).**

delivery time **from stock**

prices **price list online**
www.igus.co.uk/en/kbrm

igubal® Rod Ends | Product Range

Rod ends, female thread; 2nd generation: KBRM CL and KBLM CL

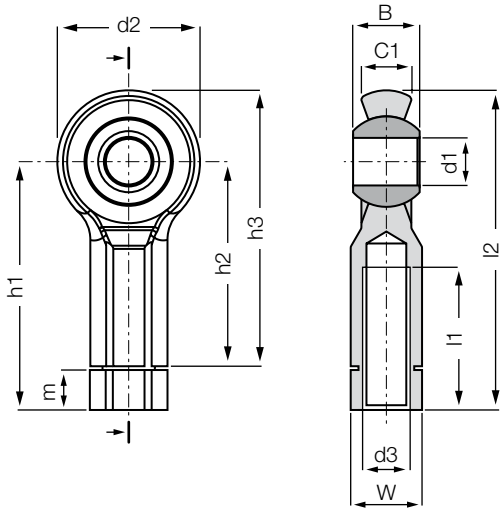

Order key

KB…M-06 CL

- 2nd Generation
- Dimension
- Metric
- Thread
- L = left-hand thread
- R = right-hand thread
- Housing (female thread)
- Dimensional series K

Simple assembly due to the hexagonal body and the integrated lock nut.

- Design with metal sleeve for higher torque strength available
- Dimensional series K according to standard DIN ISO 12240

Material:
Housing: **igumid G** ▶ **page 1127**
Spherical ball: **iglidur® W300** ▶ **page 729**
More spherical ball materials on request
▶ **page 725**

Technical Data

Part number		Max. static tensile strength		Max. static radial load		Min. thread depth	Max. torque strength	Max. torque through ball		Weight
Right-hand thread	Left-hand thread	Short term [N]	Long term [N]	Short term [N]	Long term [N]	Thread [mm]	Inner threading [Nm]	Standard without MH [Nm]	Standard with MH [Nm]	[g]
KBRM-06 CL	**KBLM-06 CL**	1,400	700	300	150	8	0.75	10	15	4.5
KBRM-08 CL	**KBLM-08 CL**	2,100	1,050	500	250	11	2.0	12	40	8.6
KBRM-10 CL	**KBLM-10 CL**	3,100	1,550	800	400	13	3.0	20	50	14.1

Dimensions [mm]

Part number		d1	d2	d3	W	B		C1	h3	h1	h2	l1	l2	m	Max. pivot angle
Right-hand thread	Left-hand thread	E10				without MH	with MH ±0.2								
KBRM-06 CL	**KBLM-06 CL**	06	20	M06	SW10	9	9.2	7	40	36.5	30	20	46.5	5.7	40°
KBRM-08 CL	**KBLM-08 CL**	08	24	M08	SW13	12	12.2	9	48	44.3	36	25	56.3	7.5	35°
KBRM-10 CL	**KBLM-10 CL**	10	30	M10	SW15	14	14.2	10.5	58	52.2	43	30	67.2	8.4	35°

Rod ends can be ordered in metric dimensions **with metal insert** with the addition of **MH** after the part numbers listed here. Example: KBRM-10 CL **MH (Inner-Ø: 10 mm).**
For another spherical bearing material than iglidur® W300, please add **J** or **R** to the part number. Example: KBRM-10 CL **J.**

Spherical ball materials to choose ▶ page 725

RKM: low-cost

JKM: Low moisture absorption

W300: standard spherical bearing with metal sleeve

J4KM: low-cost and low moisture absorption

igubal® Rod Ends | Product Range

Rod ends with female thread: KCRM and KCLM

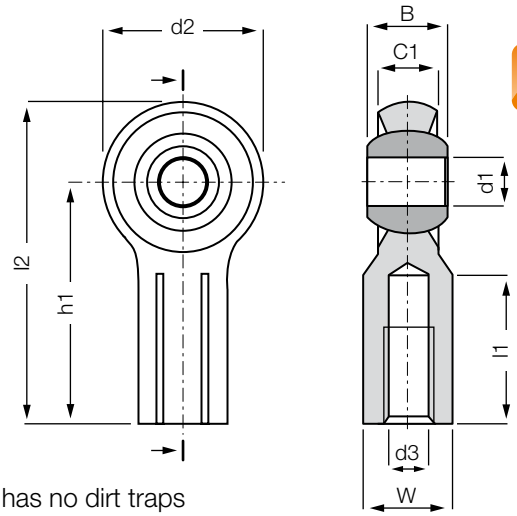

Order key

KC...M-06

- Dimension
- Metric
- Thread
- L = left-hand thread
- R = right-hand thread
- Housing (female thread)
- Dimensional series K

- Smooth design has no dirt traps
- Spherical ball is clipped in
- Choice of iglidur® ball materials
- Compensation of misalignment
- Light weight
- Excellent corrosion resistance
- Design with metal sleeve for higher torque strength available
- Dimensional series K according to standard DIN ISO 12240

Material:
Housing: **igumid G** ▶ **page 1127**
Spherical ball: **iglidur® W300** ▶ **page 729**
More spherical ball materials on request
▶ **page 725**

Technical Data

Part number		Max. static tensile strength		Max. static radial load		Max. torque strength	Max. torque through balls		Weight
Right-hand thread	Left-hand thread	Short term [N]	Long term [N]	Short term [N]	Long term [N]	Inner threading [Nm]	without MH [Nm]	with MH [Nm]	[g]
KCRM-06	**KCLM-06**	1,400	700	300	150	0.75	10	15	4.2
KCRM-08	**KCLM-08**	2,100	1,050	500	250	2.00	12	40	7.6
KCRM-10	**KCLM-10**	3,100	1,500	800	400	3.00	20	50	12.8

Dimensions [mm]

Part number		d1	d2	d3	W	B		C1	h1	l1	l2	Max. pivot angle
Right-hand thread	Left-hand thread					without MH	with MH ± 0.2					
KCRM-06	**KCLM-06**	06	20	M06	SW10	9.0	9.2	7	30	13.5	40	40°
KCRM-08	**KCLM-08**	08	24	M08	SW13	12.0	12.2	9	36	17	48	35°
KCRM-10	**KCLM-10**	10	30	M10	SW15	14.0	14.2	10.5	43	22	58	35°

Rod ends can be ordered in metric dimensions **with metal insert** with the addition of **MH** after the part numbers listed here. Example: KCRM-10 **MH (Inner-Ø: 10 mm).**

Spherical ball materials to choose ▶ page 725


RKM: low-cost


JKM: Low moisture absorption


W300: standard spherical bearing with metal sleeve


J4KM: low-cost and low moisture absorption

delivery time **from stock**

prices **price list online**
www.igus.co.uk/en/kcrm

igubal® Rod Ends | Product Range

Rod ends with male thread: KARM and KALM

Standard design

Design with metal sleeve (MH)

- Maintenance-free, self-lubricating
- High strength ander impact loads
- Very high tensile strength for varying loads
- Compensation of misalignment
- Compensation of edge loads
- Insensitive to dirt, dust and lint
- Corrosion- and chemical-restistant
- High vibration dampening capacity
- Suitable for rotating, oscillating, and linear movements
- Light weight
- Dimensional series K according to standard DIN ISO 12240
- Available with metal sleeve for higher torque

Technical Data

Part number		Max. static tensile strength		Max. static radial load		Min. thread depth	Max. torque strength	Max. torque through ball		Weight
Right-hand thread	Left-hand thread	Short term [N]	Long term [N]	Short term [N]	Long term [N]	Thread [mm]	Outer threading [Nm]	without MH [Nm]	with MH [Nm]	[g]
KARM-05	**KALM-05**	800	400	80	40	13	0.4	5	12	2.7
KARM-06	**KALM-06**	1,000	500	100	50	15	0.5	10	15	3.9
KARM-08	**KALM-08**	1,700	850	200	100	18	2.0	12	40	7.1
KARM-10	**KALM-10**	2,500	1,250	300	150	20	5.0	20	50	12.5
KARM-10 F	**KALM-10 F**	2,500	1,250	300	150	20	3.0	20	50	12.5
KARM-12	**KALM-12**	2,700	1,350	400	200	22	6.0	30	70	18
KARM-12 F	**KALM-12 F**	2,700	1,350	400	200	22	6.0	30	70	18
KARM-14	**KALM-14**	3,400	1,700	700	350	25	12.0	35	75	25
KARM-16	**KALM-16**	3,900	1,950	800	400	26	17.0	40	110	34
KARM-16 F	**KALM-16 F**	3,900	1,950	800	400	26	17.0	40	110	34
KARM-18	**KALM-18**	4,200	2,100	1,000	500	29	20.0	45	150	45.9
KARM-20	**KALM-20**	6,000	3,000	1,300	650	32	25.0	55	200	58
KARM-20 M20	**KALM-20 M20**	6,000	3,000	1,300	650	32	25.0	55	200	58
KARM-22	**KALM-22**	7,200	3,600	1,500	750	34	25.0	60	–	86.2
KARM-25	**KALM-25**	7,500	3,750	1,900	950	39	45.0	65	–	99.1
KARM-30	**KALM-30**	8,800	4,400	2,300	1,150	46	85.0	70	–	160.4

igubal® Rod Ends | Product Range

Rod ends with male thread: KARM and KALM

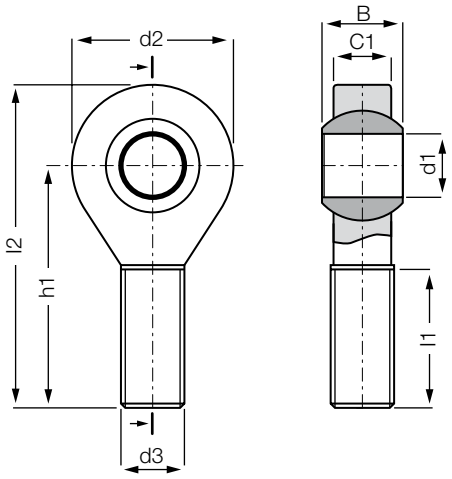

Order key

KA…M-05

- Dimension
- Metric
- Thread
- L = left-hand thread
- R = right-hand thread
- Housing (male thread)
- Dimensional series K

Material:
Housing: **igumid G** ▶ **page 1127**
Spherical ball: **iglidur® W300** ▶ **page 729**

Dimensions [mm]

Part number Right-hand thread	Part number Left-hand thread	d1 E10	d2	d3	C1	B without MH ± 0.2	B with MH ± 0.2	h1	l1	l2	Max. pivot angle
KARM-05	**KALM-05**	05	18	M05	6.0	8	8.1	33	19	42	30°
KARM-06	**KALM-06**	06	20	M06	7.0	9	9.2	36	21	46	29°
KARM-08	**KALM-08**	08	24	M08	9.0	12	12.2	42	25	55	25°
KARM-10	**KALM-10**	10	30	M10	10.5	14	14.2	48	28	63	25°
KARM-10 F	**KALM-10 F**	10	30	M10 x 1.25	10.5	14	14.2	48	28	63	25°
KARM-12	**KALM-12**	12	34	M12	12.0	16	16.2	54	32	71	25°
KARM-12 F	**KALM-12 F**	12	34	M12 x 1.25	12.0	16	16.2	54	32	71	25°
KARM-14	**KALM-14**	14	38	M14	13.5	19	19.2	61	36	79	25°
KARM-16	**KALM-16**	16	42	M16	15.0	21	21.2	66	37	88	23°
KARM-16 F	**KALM-16 F**	16	42	M16 x 1.5	15.0	21	21.2	66	37	88	23°
KARM-18	**KALM-18**	18	46	M18 x 1.5	16.5	23	23.2	72	41	96	23°
KARM-20	**KALM-20**	20	50	M20 x 1.5	18.0	25	25.3	78	45	104	23°
KARM-20 M20	**KALM-20 M20**	20	50	M20 x 2.5	18.0	25	25.3	78	45	104	23°
KARM-22	**KALM-22**	22	56	M22 x 1.5	20.0	28	–	84	48	112	22°
KARM-25	**KALM-25**	25	61	M24 x 2.0	22.0	31	–	95	55	126	22°
KARM-30	**KALM-30**	30	71	M30 x 2.0	25.0	37	–	112	66	147	22°

For rod ends with **metal insert** please add **MH** to the part number. Example: KARM-10 **MH (Inner-Ø: 10 mm).**

delivery time **from stock**

prices **price list online**
www.igus.co.uk/en/karm

igubal® Rod Ends | Product Range

Rod ends, male thread; 2nd generation: KARM CL

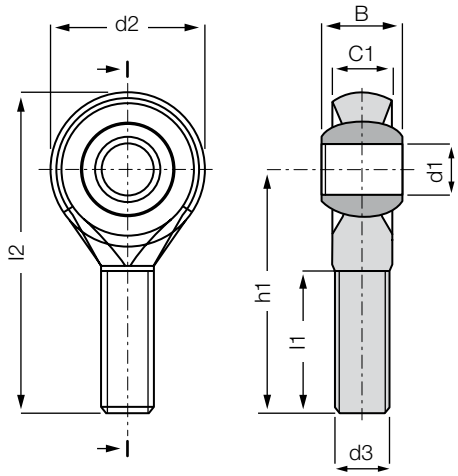

Order key

KARM-06 CL

- 2nd Generation
- Dimension
- Metric
- Thread
- Housing (male thread)
- Dimensional series K

- Smooth design has no dirt traps
- Compensation of misalignment
- Light weight
- Excellent corrosion resistance
- Design with metal sleeve for higher torque strength available
- Left-hand thread version KALM in preparation
- Dimensional series K according to standard DIN ISO 12240

Material:
Housing: **igumid G** ▶ **page 1127**
Spherical ball: **iglidur® W300** ▶ **page 729**
More spherical ball materials on request
▶ **page 725**

Technical data

Part number	Max. static tensile strength		Max. radial load		Min. thread depth	Max. torque strength	Max. torque through ball		Weight
	Short term [N]	Long term [N]	Short term [N]	Long term [N]	Thread [mm]	Outer threading [Nm]	without MH [Nm]	with MH [Nm]	[g]
KARM-06 CL	1,000	500	100	50	15	0.5	10	15	3.5
KARM-08 CL	1,700	850	200	100	18	2.0	12	40	6.2
KARM-10 CL	2,500	1,250	300	150	20	5.0	20	50	11.2
KARM-12 CL	2,700	1,350	400	200	22	6.0	30	70	15.6

Dimensions [mm]

Part number	d1	d2	d3	C1	B		h1	l1	l2	Max. pivot angle
	E10				without MH	with MH				
						± 0.2				
KARM-06 CL	06	20	M06	7.0	9.0	9.2	36	21	46	40°
KARM-08 CL	08	24	M08	9.0	12.0	12.2	42	25	55	35°
KARM-10 CL	10	30	M10	10.5	14.0	14.2	48	28	63	35°
KARM-12 CL	12	34	M12	12.0	16.0	16.2	54	32	71	35°

Rod ends can be ordered in metric dimensions **with metal insert** with the addition of **MH** after the part numbers listed here. Example: KARM-10 **MH (Inner-Ø: 10 mm).**
For another spherical bearing material please add **J** or **R** to the part number. Example: KARM-10 CL **J**.

delivery time **on request**

prices **price list online**
www.igus.co.uk/en/karm-cl

My Sketches

igubal® Rod Ends | Product Range

Rod ends with female thread: EBRM and EBLM

- Maintenance-free, self-lubricating
- High strength under impact loads
- Very high tensile strength for varying loads
- Compensation of misalignment
- Compensation of edge loads
- Insensitive to dirt, dust and lint
- Corrosion- and chemical-resistant
- High vibration-dampening capacity
- Suitable for rotating, oscillating and linear movements
- Light weight
- Dimensional series E according to standard DIN ISO 12240
- 50 % higher tensile force possible due to metal inlay (only dimension 16, more dimensions on request)
- For temperatures up to +200°C we recommend EBRM-HT and EBLM-HT ▶ **page 650**

Technical Data

Part number		Max. static tensile strength		Max. static radial load		Min. thread depth	Max. torque strength	Max. torque through ball	Weight
Right-hand thread	Left-hand thread	Short term [N]	Long term [N]	Short term [N]	Long term [N]	Thread [mm]	Inner threading [Nm]	[Nm]	[g]
EBRM-04	**EBLM-04**	800	400	100	50	7	0.4	2.0	1.8
EBRM-05	**EBLM-05**	1,300	650	150	75	8	0.5	2.0	3.2
EBRM-06	**EBLM-06**	1,500	750	200	100	8	1.5	2.5	4.0
EBRM-08	**EBLM-08**	2,000	1,000	450	225	11	5.0	7.0	6.9
EBRM-10	**EBLM-10**	2,300	1,150	500	250	13	15.0	14.0	11.2
EBRM-10 F	**EBLM-10 F**	2,300	1,150	500	250	13	6.0	14.0	11.2
EBRM-12	**EBLM-12**	3,300	1,650	550	275	14	20.0	25.0	17.1
EBRM-12 F	**EBLM-12 F**	3,300	1,650	550	275	14	15.0	25.0	17.1
EBRM-15	**EBLM-15**	4,800	2,400	800	400	18	25.0	30.0	28.9
EBRM-16	**EBLM-16**	5,000	2,500	850	425	18	20.0	32.0	32.6
EBRM-16 F	**EBLM-16 F**	5,000	2,500	850	425	18	15.0	32.0	32.6
EBRM-17	**EBLM-17**	5,300	2,650	1,100	550	19	30.0	35.0	42.4
EBRM-17 F	**EBLM-17 F**	5,300	2,650	1,100	550	19	27.5	35.0	42.4
EBRM-20	**EBLM-20**	7,200	3,600	1,800	900	22	60.0	40.0	65.8
EBRM-20 M20	**EBLM-20 M20**	7,200	3,600	1,800	900	22	60.0	40.0	65.8
EBRM-25	**EBLM-25**	10,000	5,000	2,600	1,300	27	115.0	55.0	125.9
EBRM-30	**EBLM-30**	10,500	5,250	3,000	1,500	33	130.0	70.0	184.1

Spherical ball materials to choose ▶ page 725

J4VEM: clearance-free, preloaded

JEM: low moisture absorption

REM: low-cost

J4EM: low-cost and low moisture absorption

igubal® Rod Ends | Product Range

Rod ends with female thread: EBRM and EBLM

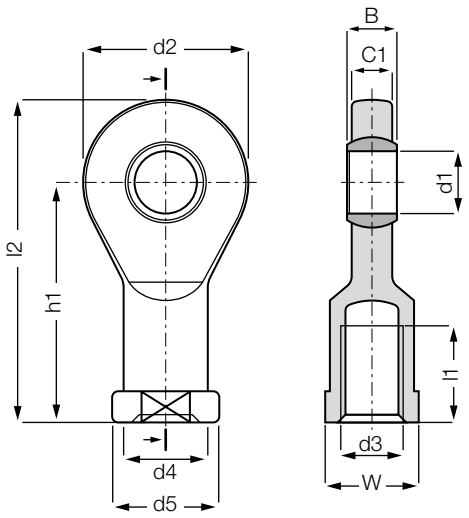

Order key

EB...M-04

- Dimension
- Metric
- Thread
- L = left-hand thread
- R = right-hand thread
- Housing (female thread)
- Dimensional series E

Material:
Housing: **igumid G** ▶ **page 1127**
Spherical ball: **iglidur® W300** ▶ **page 729**
More spherical ball materials on request
▶ **page 725**

Dimensions [mm]

Part number Right-hand thread	Left-hand thread	d1 E10	d2	d3	d4	d5	C1	B	h1	l1	l2	W	Max. pivot angle
EBRM-04*	**EBLM-04***	4	15	M04	–	–	3.5	5	22.5	9.5	30.0	SW08	33°
EBRM-05	**EBLM-05**	5	19	M05	9.0	11	4.4	6	30	12	39.5	SW09	33°
EBRM-06	**EBLM-06**	6	21	M06	11.0	13	4.4	6	30	12	40.5	SW11	27°
EBRM-08	**EBLM-08**	8	24	M08	13.0	16	6.0	8	36	14	48.0	SW14	24°
EBRM-10	**EBLM-10**	10	29	M10	15.0	19	7.0	9	43	18	57.5	SW17	24°
EBRM-10 F	**EBLM-10 F**	10	29	M10 x 1.25	15.0	19	7.0	9	43	18	57.5	SW17	24°
EBRM-12	**EBLM-12**	12	34	M12	18.0	22	8.0	10	50	20	67.0	SW19	21°
EBRM-12 F	**EBLM-12 F**	12	34	M12 x 1.25	18.0	22	8.0	10	50	20	67.0	SW19	21°
EBRM-15	**EBLM-15**	15	40	M14	21.0	26	10.0	12	61	26	81.0	SW22	21°
EBRM-16*	**EBLM-16***	16	43	M16	–	–	10.5	13	64.5	26.5	86.0	SW22	21°
EBRM-16 F*	**EBLM-16 F***	16	43	M16 x 1.5	–	–	10.5	13	64.5	26.5	86.0	SW22	21°
EBRM-17	**EBLM-17**	17	46	M16	24.0	30	11.0	14	67	27	90.0	SW27	18°
EBRM-17 F	**EBLM-17 F**	17	46	M16 x 1.5	24.0	30	11.0	14	67	27	90.0	SW27	18°
EBRM-20	**EBLM-20**	20	53	M20 x 1.5	27.0	34	13.0	16	77	31	103.5	SW30	16°
EBRM-20 M20	**EBLM-20 M20**	20	53	M20 x 2.5	27.0	34	13.0	16	77	31	103.5	SW30	16°
EBRM-25	**EBLM-25**	25	64	M24 x 2.0	34.0	41	17.0	20	94	38	126.5	SW36	16°
EBRM-30	**EBLM-30**	30	73	M30 x 2.0	41.0	48	19.0	22	110	47	146.5	SW41	13°

* special form with hexagonal foot

delivery time from stock

prices price list online
www.igus.co.uk/en/ebrm

igubal® Rod Ends | Product Range

Rod ends with male thread: EARM and EALM

- Maintenance-free, dry-running
- High stiffness
- Very high tensile strength for varying loads
- Compensation of misalignment
- Compensation of edge loads
- Insensitive to dirt, dust and lint
- Corrosion- and chemical-resistant
- High vibration-dampening capacity
- Suitable for rotating, oscillating, and linear movements
- Light weight
- Dimensional series E according to standard DIN ISO 12240
- For temperatures up to +200°C we recommend EARM-HT and EALM-HT ▶ **page 651**

Technical Data

Part number		Max. static tensile strength		Max. static radial load		Min. thread depth	Max. torque strength	Max. torque through ball	Weight
Right-hand thread	Left-hand thread	Short term [N]	Long term [N]	Short term [N]	Long term [N]	Thread [mm]	Outer threading [Nm]	[Nm]	[g]
EARM-05	**EALM-05**	550	275	50	25	14	0.4	2.0	2.2
EARM-06	**EALM-06**	850	425	80	40	14	0.5	2.5	2.7
EARM-08	**EALM-08**	1,600	800	160	80	17	2.0	7.0	5.1
EARM-10	**EALM-10**	2,600	1,300	250	125	19	5.0	14.0	8.4
EARM-10 F	**EALM-10 F**	2,600	1,300	250	125	19	3.0	14.0	8.4
EARM-12	**EALM-12**	3,100	1,550	300	150	20	6.0	25.0	14.3
EARM-12 F	**EALM-12 F**	3,100	1,550	300	150	20	6.0	25.0	14.3
EARM-15	**EALM-15**	3,400	1,700	600	300	24	12.5	30.0	21.1
EARM-17	**EALM-17**	3,600	1,800	900	450	26	17.5	35.0	30.2
EARM-17 F	**EALM-17 F**	3,600	1,800	900	450	26	21.0	35.0	30.2
EARM-20	**EALM-20**	6,800	3,400	1,700	850	30	25.0	40.0	57.3
EARM-20 M20	**EALM-20 M20**	6,800	3,400	1,700	850	30	25.0	40.0	57.3
EARM-25	**EALM-25**	7,000	3,500	1,000	500	37	45.0	55.0	94.8
EARM-30	**EALM-30**	7,000	3,500	2,000	1,000	46	85.0	70.0	156.4

Spherical ball materials to choose ▶ page 725

J4VEM: clearance-free, preloaded

JEM: low moisture absorption

REM: low-cost

J4EM: low-cost and low moisture absorption

igubal® Rod Ends | Product Range

Rod ends with male thread: EARM and EALM

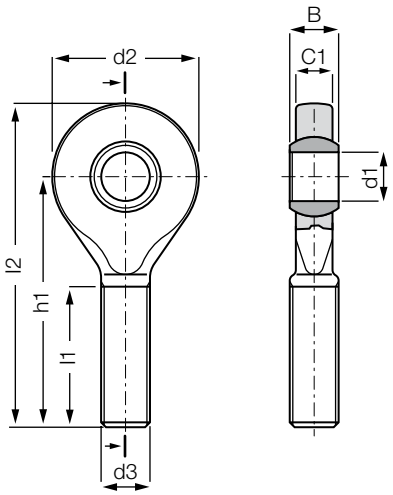

Order key

EA…M-05

- Dimension
- Metric
- Thread
- L = left-hand thread
- R = right-hand thread
- Housing (male thread)
- Dimensional series E

Material:
Housing: **igumid G** ▶ **page 1127**
Spherical ball: **iglidur® W300** ▶ **page 729**
More spherical ball materials on request
▶ **page 725**

Dimensions [mm]

Part number Right-hand thread	Part number Left-hand thread	d1 E10	d2	d3	C1	B	h1	l1	l2	Max. pivot angle
EARM-05	EALM-05	5	19	M05	4.4	6	36	20	45.5	33°
EARM-06	EALM-06	6	21	M06	4.4	6	36	20	46.5	27°
EARM-08	EALM-08	8	24	M08	6.0	8	41	24	53.0	24°
EARM-10	EALM-10	10	29	M10	7.0	9	47.5	27	62.0	24°
EARM-10 F	EALM-10 F	10	29	M10 x 1.25	7.0	9	47.5	27	62.0	24°
EARM-12	EALM-12	12	34	M12	8.0	10	54	29	71.0	21°
EARM-12 F	EALM-12 F	12	34	M12 x 1.25	8.0	10	54	29	71.0	21°
EARM-15	EALM-15	15	40	M14	10.0	12	63	34	83.0	21°
EARM-17	EALM-17	17	46	M16	11.0	14	69	37	92.0	18°
EARM-17 F	EALM-17 F	17	46	M16 x 1.5	11.0	14	69	37	92.0	18°
EARM-20	EALM-20	20	53	M20 x 1.5	13.0	16	80	43	106.5	16°
EARM-20 M20	EALM-20 M20	20	53	M20 x 2.5	13.0	16	80	43	106.5	16°
EARM-25	EALM-25	25	64	M24 x 2.0	17.0	20	97	53	129.0	16°
EARM-30	EALM-30	30	73	M30 x 2.0	19.0	22	113	65	149.5	13°

delivery time from stock

prices price list online
www.igus.co.uk/en/earm

igubal® Rod Ends | Product Range

High temperature rod ends with female thread: EBRM-HT and EBLM-HT

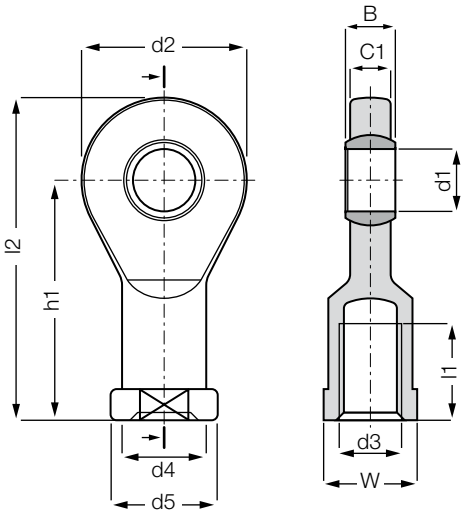

Order key

EB…M-05-HT

- High Temperature
- Dimension
- Metric
- Thread
- L = left-hand thread
- R = right-hand thread
- Housing (female thread)
- Dimensional series E

- For temperatures up to +200 °C
- Maintenance-free, self-lubricating
- High strength under impact loads
- Very high tensile strength for varying loads
- Compensation of misalignment
- Compensation of edge loads
- Insensitive to dirt, dust and lint
- Corrosion- and chemical-resistant (Chemical table ▶ **page 1118**)
- For underwater applications
- Suitable for rotating, oscillating and linear movements
- Light weight
- Dimensional series E according to standard DIN ISO 12240

Material:
Housing: **iguton G ▶ page 1127**
Spherical ball: **iglidur® X ▶ page 731**

Dimensions [mm]

Part number Right-hand thread	Part number Left-hand thread	d1 E10	d2	d3	d4	d5	C1	B	h1	l1	l2	W	Max. pivot angle	Weight [g]
EBRM-05-HT	**EBLM-05-HT**	5	19	M05	9.0	11	4.4	6	30	12	39.5	SW09	33°	3.8
EBRM-06-HT	**EBLM-06-HT**	6	21	M06	11.0	13	4.4	6	30	12	40.5	SW11	27°	5.0
EBRM-08-HT	**EBLM-08-HT**	8	24	M08	13.0	16	6.0	8	36	16	48.0	SW14	24°	8.5
EBRM-10-HT	**EBLM-10-HT**	10	29	M10	15.0	19	7.0	9	43	18	57.5	SW17	24°	13.7
EBRM-12-HT	**EBLM-12 HT**	12	34	M12	18.0	22	8.0	10	50	20	67.0	SW19	21°	21.4

Other dimensions available on request

delivery time **from stock**

prices **price list online**
www.igus.co.uk/en/ebrm-ht

igubal® Rod Ends | Product Range

High temperature rod ends with male thread: EARM-HT and EALM-HT

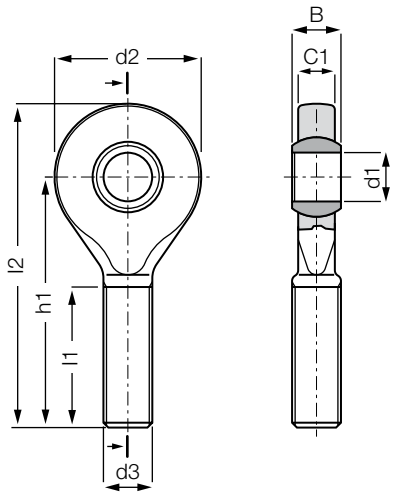

Order key

EA…M-05-HT

- High Temperature
- Dimension
- Metric
- Thread
- L = left-hand thread
- R = right-hand thread
- Housing (male thread)
- Dimensional series E

- For temperatures up to +200 °C
- Maintenance-free, self-lubricating
- High strength under impact loads
- Very high tensile strength for varying loads
- Compensation of misalignment
- Compensation of edge loads
- Insensitive to dirt, dust and lint
- Corrosion- and chemical-resistant (Chemical table ▶ **page 1118**)
- For underwater applications
- Suitable for rotating, oscillating and linear movements
- Light weight
- Dimensional series E according to standard DIN ISO 12240

Material:
Housing: **iguton G ▶ page 1127**
Spherical ball: **iglidur® X ▶ page 731**

Dimensions [mm]

Part number		d1	d2	d3	C1	B	h1	l1	l2	Max. pivot angle	Weight
		E10									[g]
Right-hand thread	Left-hand thread										
EARM-05-HT	**EALM-05-HT**	5	19	M05	4.4	6	36.0	20	45.5	33°	2.8
EARM-06-HT	**EALM-06-HT**	6	21	M06	4.4	6	36.0	20	46.5	27°	3.4
EARM-08-HT	**EALM-08-HT**	8	24	M08	6.0	8	41.0	24	53.0	24°	6.1
EARM-10-HT	**EALM-10-HT**	10	29	M10	7.0	9	47.5	27	62.0	24°	10.2
EARM-12-HT	**EALM-12-HT**	12	34	M12	8.0	10	54.0	29	71.0	21°	15.7

Other dimensions available on request

delivery time **from stock**

prices **price list online**
www.igus.co.uk/en/earm-ht

igubal® Rod Ends | Product Range | Inch

Rod ends with female thread: KBRI and KBLI

- Maintenance-free, self-lubricating
- High strength under impact loads
- Very high tensile strength for varying loads
- Compensation of misalignment
- Compensation of edge loads
- Insensitive to dirt, dust and lint
- Corrosion- and chemical-resistant
- High vibration-dampening capacity
- Suitable for rotating, oscillating, and linear movements
- Light weight

Technical Data

Part number		Max. static tensile strength		Max. radial load		Min. thread depth	Max. torque strength	Max. torque through ball	Weight
Right-hand thread	Left-hand thread	Short term [N]	Long term [N]	Short term [N]	Long term [N]	Thread [Inch]	Inner threading [Nm]	[Nm]	[g]
KBRI-03	**KBLI-03**	900	450	300	150	.350	2	3	3.3
KBRI-04	**KBLI-04**	1,100	550	400	200	.480	5	4	5.1
KBRI-05	**KBLI-05**	1,700	850	500	250	.480	6	10	7.1
KBRI-06	**KBLI-06**	2,000	1,000	1,000	500	.568	7	15	12.6
KBRI-07	**KBLI-07**	2,300	1,150	1,200	600	.655	18	25	16.1
KBRI-08	**KBLI-08**	2,600	1,300	1,500	750	.743	23	35	26.5
KBRI-10	**KBLI-10**	4,900	2,450	1,700	850	.962	30	50	38.7
KBRI-12	**KBLI-12**	5,600	2,800	2,300	1,150	1.093	40	70	54.4
KBRI-16	**KBLI-16**	6,000	3,000	2,600	1,300	1.488	46	85	197.5

igubal® Rod Ends | Product Range | Inch

Rod ends with female thread: KBRI and KBLI

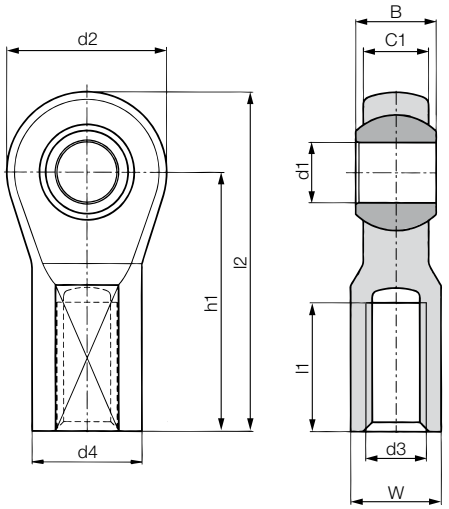

Order key

KB…I-03

- Dimension
- Inch
- Thread
- L = left-hand thread
- R = right-hand thread
- Housing (female thread)
- Dimensional series K

Material:
Housing: **igumid G** ▶ **page 1127**
Spherical ball: **iglidur® W300** ▶ **page 729**

Dimensions [Inch]

Part number		d1 E10	d2	d3	d4	C1	B	h1	l1	l2	W	Max. pivot angle
Right-hand thread	Left-hand thread											
KBRI-03	**KBLI-03**	.1900	.625	10-32	.406	.246	.312	1.062	.500	1.374	.312	25°
KBRI-04	**KBLI-04**	.2500	.750	1/4-28	.469	.272	.365	1.312	.687	1.687	.375	25°
KBRI-05	**KBLI-05**	.3125	.875	5/16-24	.500	.340	.437	1.375	.687	1.813	.437	25°
KBRI-06	**KBLI-06**	.3750	1.000	3/8-24	.687	.394	.500	1.625	.812	2.125	.562	22°
KBRI-07	**KBLI-07**	.4375	1.125	7/16-20	.750	.456	.562	1.812	.937	2.374	.625	22°
KBRI-08	**KBLI-08**	.5000	1.312	1/2-20	.875	.487	.625	2.125	1.062	2.781	.750	22°
KBRI-10	**KBLI-10**	.6250	1.500	5/8-18	1.000	.545	.750	2.500	1.375	3.250	.875	22°
KBRI-12	**KBLI-12**	.7500	1.750	3/4-16	1.125	.676	.875	2.875	1.562	3.750	1.000	22°
KBRI-16	**KBLI-16**	1.0000	2.750	1-12	1.625	1.000	1.375	4.125	2.125	5.500	1.500*	20°

* Spanner flat design

delivery time from stock

prices price list online
www.igus.co.uk/en/kbri

igubal® Rod Ends | Product Range | Inch

Rod ends with male thread: KARI and KALI

- Maintenance-free, self-lubricating
- High strength under impact loads
- Very high tensile strength for varying loads
- Compensation of misalignment
- Compensation of edge loads
- Insensitive to dirt, dust and lint
- Corrosion- and chemical-resistant
- High vibration-dampening capacity
- Suitable for rotating, oscillating, and linear movements
- Light weight

Technical Data

Part number		Max. static tensile strength		Max. radial load		Min. thread depth	Max. torque strength	Max. torque through ball	Weight
Right-hand thread	Left-hand thread	Short term [N]	Long term [N]	Short term [N]	Long term [N]	[Inch]	Outer threading [Nm]	[Nm]	[g]
KARI-03	**KALI-03**	390	200	70	35	.525	0.5	3	2.1
KARI-04	**KALI-04**	900	450	100	50	.700	1.0	4	3.5
KARI-05	**KALI-05**	1,100	550	150	75	.875	2.0	10	6
KARI-06	**KALI-06**	1,500	750	350	175	.875	3.0	15	8.8
KARI-07	**KALI-07**	2,000	1,000	400	200	.962	6.0	25	12.4
KARI-08	**KALI-08**	2,500	1,250	450	225	1.050	9.0	35	18.5
KARI-10	**KALI-10**	3,500	1,750	600	300	1.137	12.0	50	27.6
KARI-12	**KALI-12**	3,900	1,950	1,000	500	1.226	25.0	70	42.8
KARI-16	**KALI-16**	4,400	2,200	1,300	650	1.488	45.0	85	143.3

igubal® Rod Ends | Product Range | Inch

Rod ends with male thread: KARI and KALI

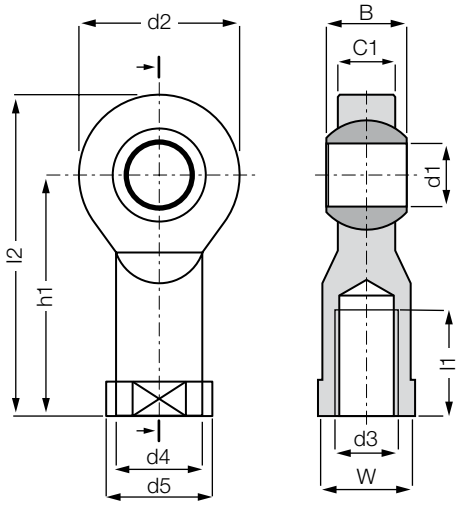

Order key

KA…I-03

- Dimension
- Inch
- Thread
- L = left-hand thread
- R = right-hand thread
- Housing (male thread)
- Dimensional series K

Material:
Housing: **igumid G** ▶ **page 1127**
Spherical ball: **iglidur® W300** ▶ **page 729**

Dimensions [Inch]

Part number Right-hand thread	Left-hand thread	d1 E10	d2	d3	C1	B	h1	l1	l2	Max. pivot angle
KARI-03	**KALI-03**	.1900	.625	10-32	.234	.312	1.250	.750	1.563	25°
KARI-04	**KALI-04**	.2500	.750	1/4-28	.250	.365	1.562	1.000	1.937	25°
KARI-05	**KALI-05**	.3125	.875	5/16-24	.312	.437	1.875	1.250	2.313	25°
KARI-06	**KALI-06**	.3750	1.000	3/8-24	.359	.500	1.938	1.250	2.438	22°
KARI-07	**KALI-07**	.4375	1.125	7/16-20	.406	.562	2.125	1.375	2.688	22°
KARI-08	**KALI-08**	.5000	1.312	1/2-20	.453	.625	2.428	1.500	2.094	22°
KARI-10	**KALI-10**	.6250	1.500	5/8-18	.484	.750	2.625	1.625	3.375	22°
KARI-12	**KALI-12**	.7500	1.750	3/4-16	.593	.875	2.875	1.750	3.750	22°
KARI-16	**KALI-16**	1.0000	2.750	1-12	1.000	1.375	4.125	2.350	5.500	20°

delivery time **from stock**

prices **price list online**
www.igus.co.uk/en/kari

igubal® Rod Ends | Product Range | Inch

Rod ends with female thread: EBRI and EBLI

- Maintenance-free, self-lubricating
- High strength under impact loads
- Very high tensile strength for varying loads
- Compensation of misalignment
- Compensation of edge loads
- Insensitive to dirt, dust and lint
- Corrosion- and chemical-resistant
- High vibration-dampening capacity
- Suitable for rotating, oscillating and linear movements
- Light weight

Technical Data

Part number		Max. static tensile strength		Max. radial load		Min. thread depth	Max. torque strength	Max. torque through ball	Weight
		Short term	Long term	Short term	Long term	Thread	Inner threading		
Right-hand thread	Left-hand thread	[N]	[N]	[N]	[N]	[Inch]	[Nm]	[Nm]	[g]
EBRI-03	**EBLI-03**	1,300	650	150	75	.315	2	2.0	3,1
EBRI-04	**EBLI-04**	1,500	750	200	100	.315	5	2.5	3,8
EBRI-05	**EBLI-05**	2,000	1,000	450	225	.433	6	7.0	6.9
EBRI-06	**EBLI-06**	2,300	1,150	500	250	.512	7	14.0	11.5
EBRI-07	**EBLI-07**	3,300	1,650	550	275	.551	18	25.0	17.6
EBRI-08	**EBLI-08**	3,300	1,650	550	275	.551	23	25.0	18.1
EBRI-10	**EBLI-10**	5,000	2,500	850	425	.709	30	32.0	31.9
EBRI-12	**EBLI-12**	7,200	3,600	1,800	900	.866	40	40.0	61.5

igubal® Rod Ends | Product Range | Inch

Rod ends with female thread: EBRI and EBLI

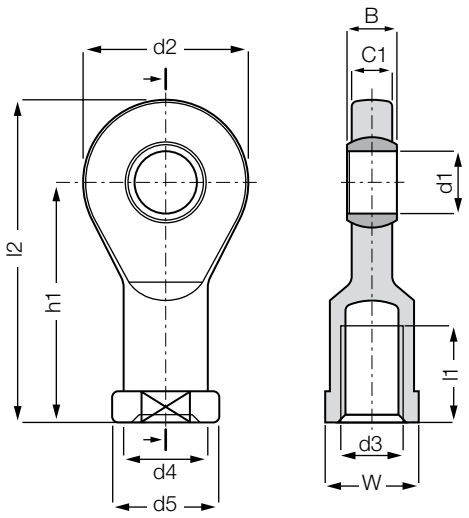

Order key

EB…I-03

- Dimension
- Inches
- Thread
- L = left-hand thread
- R = right-hand thread
- Housing (female thread)
- Dimensional series E

Material:
Housing: **igumid G** ▶ **page 1127**
Spherical ball: **iglidur® W300** ▶ **page 729**

Dimensions [Inch]

Part number Right-hand thread	Part number Left-hand thread	d1 E10	d2	d3	d4	d5	C1	B
EBRI-03	**EBLI-03**	0.1900	0.748	10–32	0.3543	0.4331	0.1732	0.1900
EBRI-04	**EBLI-04**	0.2500	0.827	1/4–28	0.4331	0.5118	0.1732	0.2500
EBRI-05	**EBLI-05**	0.3125	0.945	5/16–24	0.5118	0.6299	0.2362	0.3125
EBRI-06	**EBLI-06**	0.3750	1.142	3/8–24	0.5906	0.7480	0.2756	0.3750
EBRI-07	**EBLI-07**	0.4375	1.339	7/16–20	0.7087	0.8661	0.3150	0.4063
EBRI-08	**EBLI-08**	0.5000	1.339	1/2–20	0.7087	0.8661	0.3150	0.4063
EBRI-10*	**EBLI-10***	0.6250	1.693	5/8–18	–	–	0.4134	0.5000
EBRI-12	**EBLI-12**	0.7500	2.087	3/4–16	1.0630	1.3386	0.5118	0.6250

Part number Right-hand thread	Part number Left-hand thread	h1 E10	l1	l2	W	Max. pivot angle
EBRI-03	**EBLI-03**	1.1811	0.4724	1.5551	0.35	30°
EBRI-04	**EBLI-04**	1.1811	0.4724	1.5945	0.43	25°
EBRI-05	**EBLI-05**	1.4173	0.6299	1.8898	0.55	22°
EBRI-06	**EBLI-06**	1.6929	0.7087	2.2638	0.67	22°
EBRI-07	**EBLI-07**	1.9685	0.7874	2.6378	0.75	18°
EBRI-08	**EBLI-08**	1.9685	0.7874	2.6378	0.75	18°
EBRI-10*	**EBLI-10***	2.5394	1.0433	3.3858	0.87	16°
EBRI-12	**EBLI-12**	3.0315	1.2205	4.0748	1.18	14°

* EBRI-10/EBLI-10 special form with hexagonal foot

delivery time from stock

prices price list online
www.igus.co.uk/en/ebri

igubal® Rod Ends | Product Range

Angled ball and socket joint: WGRM and WGLM

- Connection for rotating and pivoting movements
- Light weight and robust
- Easy and quick assembly
- Vibration-dampening
- Insensitive to dirt and dust
- Ball stud made of plastic or metal*

Order key

WG...M-05

- Dimension
- Metric
- Thread
- L = left-hand thread
- R = right-hand thread
- Housing
- Angle joint

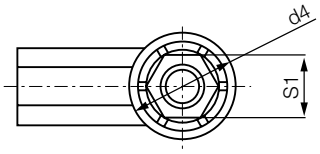

Material:
Housing: **igumid G** ▶ **page 1127**
Spherical cap: **iglidur® W300** ▶ **page 135**

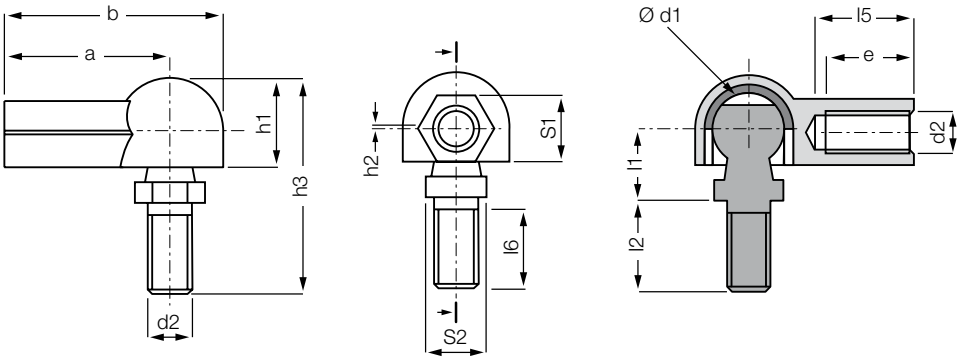

Technical Data

Part number		Max. axial tensile force (Ball stud axis*)		Max. axial compressive force (Ball stud axis)		Max. axial tensile force (Housing axis)		Max. axial tensile force in housing axis, with metal ball stud		Weight
Right-hand thread	Left-hand thread	Short term [N]	Long term [N]	Short term [N]	Long term [N]	Short term [N]	Long term [N]	Short term [N]	Long term [N]	[g]
WGRM-05	**WGLM-05**	30	15	200	100	100	50	600	300	2.6
WGRM-06	**WGLM-06**	35	17.5	300	150	140	70	800	400	3.8
WGRM-08	**WGLM-08**	250	125	500	250	200	100	1,500	750	8.0
WGRM-10	**WGLM-10**	250	125	900	450	400	200	1,900	950	13.7

*** For a metal stud please add the suffix MS. Example: WGRM-05 MS**

Dimensions [mm]

Part number		d1	d2	d4	l1	l2	l5	l6	h1	h2	h3	a	b	e	S1	S2	Max. pivot angle
Right-hand thread	Left-hand thread	+0.1 −0.1		+0.5 −0.5	+0.2 −0.2	+0.3 −0.3		Min.	+0.4 −0.4	+0.5 −0.5	+0.5 −0.5	+0.3 −0.3	+0.5 −0.5	+0.5 −0.5			
WGRM-05	**WGLM-05**	8.0	M5	12.8	9.0	10.2	14.0	8.2	10.8	0.65	25.6	22.0	28.4	11.0	SW 8	SW 7	25°
WGRM-06	**WGLM-06**	10.0	M6	14.8	11.0	12.5	16.0	10.5	12.3	0.70	30.9	25.0	32.4	13.0	SW 9	SW 8	25°
WGRM-08	**WGLM-08**	13.0	M8	19.3	13.0	16.5	18.0	13.5	16.2	1.15	38.8	30.0	39.7	16.0	SW12	SW11	25°
WGRM-10	**WGLM-10**	16.0	M10	24.0	16.0	20.0	20.0	16.0	20.0	1.15	47.0	35.0	47.0	18.0	SW14	SW13	25°

delivery time **from stock**

prices **price list online**
www.igus.co.uk/en/wgrm

igubal® Rod Ends | Product Range

Ball and socket joint (low-cost): WGRM LC and WGLM LC

Dimensions as WGRM

- Housing with ball stud
- Low weight
- Maintenance-free
- Ball stud made of plastic or metal*

Order key

WG...M-05 LC

- Low-cost
- Dimension
- Metric
- Thread
- L = left-hand thread
- R = right-hand thread
- Angle joint

Material:
Housing: **igumid G** ▶ **page 1127**

Technical Data

Part number		Max. axial tensile force (Ball stud axis*)		Max. axial compressive force (Ball stud axis)		Max. axial tensile force (Housing axis)		Max. axial tensile force in housing axis, with metal ball stud		Weight
Right-hand thread	Left-hand thread	Short term [N]	Long term [N]	Short term [N]	Long term [N]	Short term [N]	Long term [N]	Short term [N]	Long term [N]	[g]
WGRM-05 LC	**WGLM-05 LC**	30	15	200	100	100	50	600	300	2.6
WGRM-06 LC	**WGLM-06 LC**	35	17.5	300	150	140	70	800	400	4.0
WGRM-08 LC	**WGLM-08 LC**	250	125	500	250	200	100	1,500	750	8.2
WGRM-10 LC	**WGLM-10 LC**	250	125	900	450	400	200	1,900	950	13.8

*** For a metal stud please add the suffix MS. Example: WGRM-05 LC MS**

Dimensions [mm] – technical drawing ▶ page 658

Part number		d1	d2	d4	l1	l2	l5	l6	h1	h2	h3	a	b	e	S1	S2	Max. pivot angle
Right-hand thread	Left-hand thread	+0.1 –0.1		+0.5 –0.5	+0.2 –0.2	+0.3 –0.3		Min.	+0.4 –0.4	+0.5 –0.5	+0.5 –0.5	+0.3 –0.3	+0.5 –0.5	+0.5 –0.5			
WGRM-05 LC	**WGLM-05 LC**	8.0	M5	12.8	9.0	10.2	14.0	8.2	10.8	0.65	25.6	22.0	28.4	11.0	SW 8	SW 7	25°
WGRM-06 LC	**WGLM-06 LC**	10.0	M6	14.8	11.0	12.5	16.0	10.5	12.3	0.70	30.9	25.0	32.4	13.0	SW 9	SW 8	25°
WGRM-08 LC	**WGLM-08 LC**	13.0	M8	19.3	13.0	16.5	18.0	13.5	16.2	1.15	38.8	30.0	39.7	16.0	SW 12	SW 11	25°
WGRM-10 LC	**WGLM-10 LC**	16.0	M10	24.0	16.0	20.0	20.0	16.0	20.0	1.15	47.0	35.0	47.0	18.0	SW 14	SW 13	25°

delivery time **from stock**

prices **price list online**
www.igus.co.uk/en/wgrm-lc

igubal® Rod Ends | Product Range

In line ball and socket joint: AGRM and AGLM

Order key

AG...M-08

- Dimension
- Metric
- Thread
- L = left-hand thread
- R = right-hand thread
- In line ball and socket joint

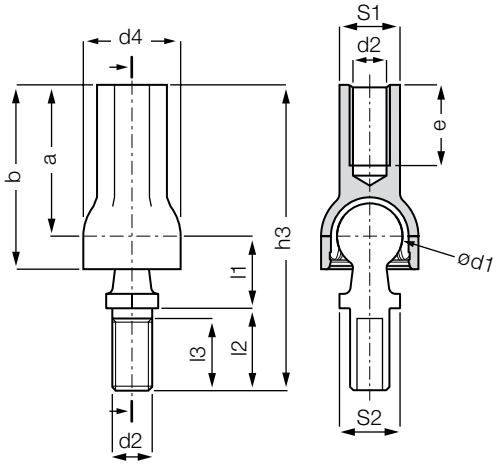

Material:
Housing: **igumid G** ▶ **page 1127**
Spherical cap: **iglidur® W300** ▶ **page 135**

- For all mechanical combinations
- Very easy hand assembly
- Maintenance-free operation
- Corrosion-and chemical-resistant
- Good vibration-dampening qualities
- Ball stud made of plastic or metal*

Technical data

Part number		Max. static axial tensile force		Max. static axial compressive force		Max. assembling force	Weight
		Short term	Long term	Short term	Long term		
Right-hand thread	Left-hand thread	[N]	[N]	[N]	[N]	[N]	[g]
AGRM-08	AGLM-08	250	125	1,000	500	110	7.8

* For a metal stud please add the suffix MS. Example: AGRM-08 MS

Dimensions [mm]

Part number		d1	d2	d4	l1	l2	l3	h3	S1	S2	a	b	e	Pivot angle	
Right-hand	Left-hand	+0.1		+0.5	+0.2	+0.3		+0.5			+0.3	+0.5			
thread	thread	–0.1		–0.5	–0.2	–0.3	Min.	–0.5			–0.3	–0.5	Min.	Recom.	Max.
AGRM-08	AGLM-08	13.0	M8	19.3	13.0	16.5	13.5	59.0	SW12	SW11	29.5	36.5	16.0	18°	25°

delivery time from stock

prices price list online
www.igus.co.uk/en/agrm

igubal® Rod Ends | Product Range

In line ball and socket joint: AGRM LC and AGLM LC

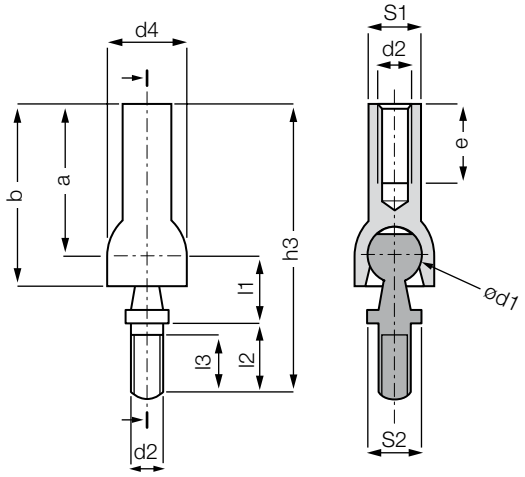

Order key

AG...M-06 LC

- Low-cost
- Dimension
- Metric
- Thread
- L = left-hand thread
- R = right-hand thread
- In line ball and socket joint

Material:
Housing: **igumid G** ▶ **page 1127**

- Housing with ball stud
- Low weight
- Maintenance-free
- Ball stud made of plastic or metal*

Technical Data

Part number		Max. static axial tensile force		Max. static axial compressive force		Weight
		Short term	Long term	Short term	Long term	
Right-hand thread	Left-hand thread	[N]	[N]	[N]	[N]	[g]
AGRM-06 LC	AGLM-06 LC	100	50	2,000	1,000	10.8

* For a metal stud please add the suffix MS. Example: AGRM-06 LC MS

Dimensions [mm]

Part number		d1	d2	d4	l1	l2	l3	h3	S1	S2	a	b	e	Pivot angle	
Right-hand	Left-hand	+0.1		+0.5	+0.2	+0.3		+0.5			+0.3	+0.5			
thread	thread	–0.1		–0.5	–0.2	–0.3	Min.	–0.5			–0.3	–0.5	Min.	Recom.	Max.
AGRM-06 LC	AGLM-06 LC	10.0	M6	14.8	11.0	11.25	7.25	47.25	SW9	10.0	25.0	29.9	13.0	18°	25°

delivery time from stock

prices price list online
www.igus.co.uk/en/agrm-lc

igubal® Rod Ends | Product Range

Adapter bolt: PKRM and PKLM

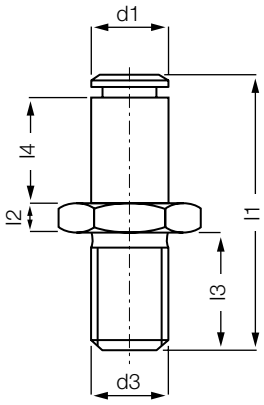

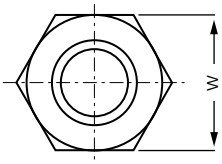

Order key

PK...M-06

- Dimension
- Metric
- Thread
- L = left-hand thread
- R = right-hand thread
- Series K
- Adapter bolt

Material:
POM ▶ page 1128

Solid polymer bolts with a hexagonal head are an accessory to the series K rod ends. The plain shank fits into the inside diameter of the spherical ball and is secured by a circlip. The igubal® adapter bolts consist of highly shock-resistant, long-fibre reinforced polymer **POM**. This component effectively transforms a standard K series rod end into a ball and socket joint.

- Light weight
- Excellent corrosion resistance
- Designed for use with K series rod ends
- High strength under impact loads
- Vibration-dampening
- Easy to fit

Technical Data and Dimensions [mm]

Part number		Max. static tensile strength		Max. static radial load		d1	d3	l1	l4	l3	l2	W	Weight
		Short term	Long term	Short term	Long term		Connection Thread	Total length	Length adjusting bolt	Thread length	Nut width	Width across flats	
Right-hand thread	Left-hand thread*	[N]	[N]	[N]	[N]	h11							[g]
PKRM-05	**PKLM-05**	100	50	200	100	5	M05	25.0	8.5	11.3	2.7	8	0.7
PKRM-06	**PKLM-06**	150	75	250	125	6	M06	28.0	9.5	12.8	3.2	10	1.2
PKRM-08	**PKLM-08**	250	125	400	200	8	M08	32.0	12.5	12.5	4.0	13	2.6
PKRM-10	**PKLM-10**	500	250	600	300	10	M10	37.5	14.5	14.5	5.0	16	4.0
PKRM-12	**PKLM-12**	700	350	900	450	12	M12M	42.0	16.5	15.5	6.0	18	7.5
PKRM-14	**PKLM-14**	800	400	1,100	550	14	14M	47.0	19.5	15.5	7.0	21	11.4
PKRM-16	**PKLM-16**	900	450	1,400	700	16	16M	52.0	22.0	16.5	8.0	24	16.9
PKRM-18	**PKLM-18**	800	400	1,700	850	18	M18 x 1.5	59.0	24.0	20.5	9.0	27	16.9
PKRM-20	**PKLM-20**	500	250	2,200	1,100	20	M20 x 1.5	67.0	26.0	25.0	10.0	30	34.4

*** Delivery time: 4-6 weeks**

delivery time **from stock**

prices **price list online**
www.igus.co.uk/en/pkrm

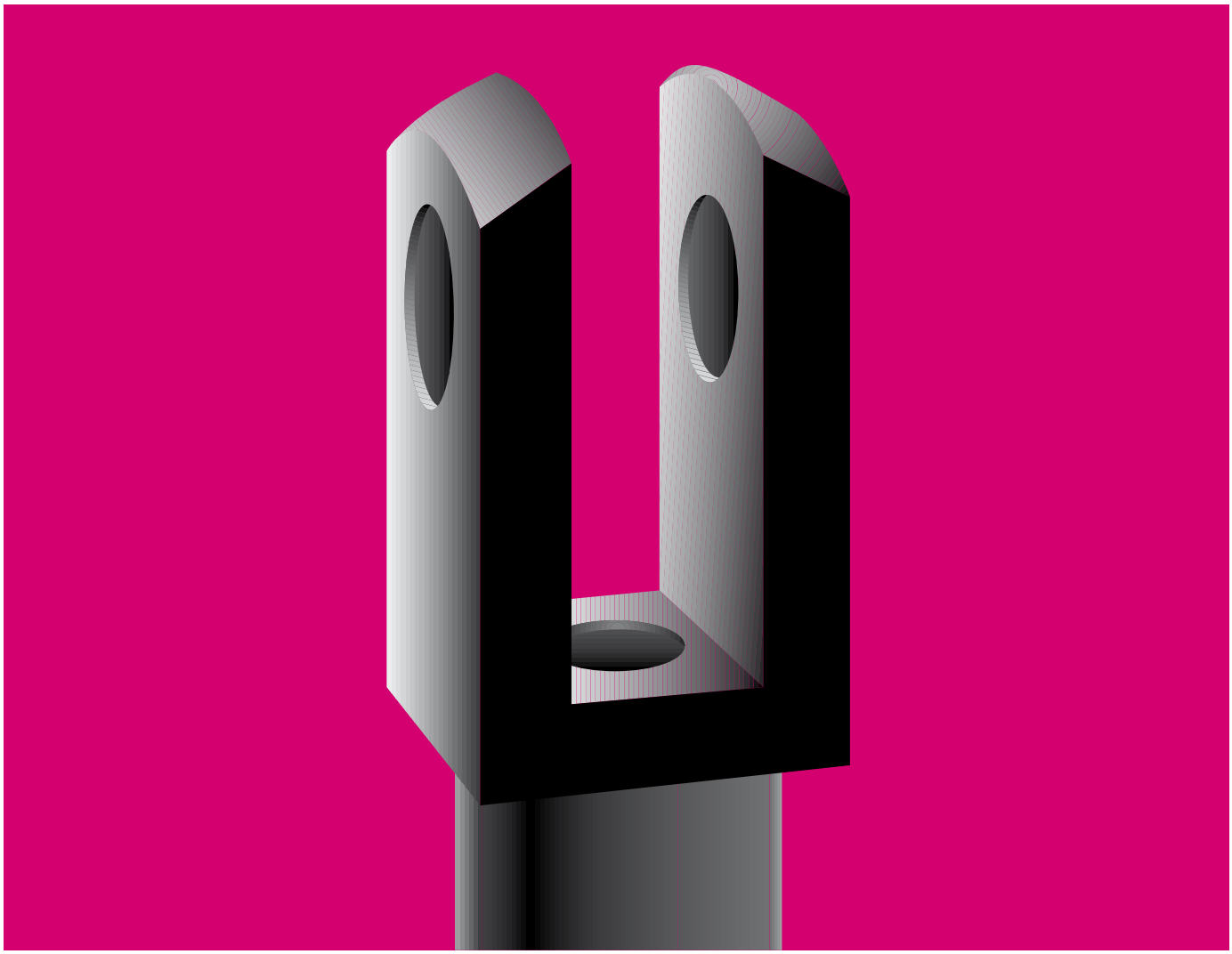

igubal® Clevis Joints

- High tensile strength
- Vibration-dampening
- Noise-dampening
- Can be used in combination with series E rod ends
- Light weight

igubal® Clevis Joints

igubal® clevis joints are all made of igumid G to DIN 71752, which can be used in combination with series E rod ends. Available components are clevis joint, clevis pin and clip or as an alternative, spring-loaded pin.

High tensile strength

Vibration-dampening

Noise-dampening

Can be used in combination with series E rod ends

Light weight

When to use it?

- If high stiffness is requested
- If corrosion resistance is required
- If no lubrication is to be used
- To save weight
- If maintenance-free, dry-running is required
- If simple assembly is required
- In combination with pneumatic cylinders and gas struts

When not to use it?

- If temperatures are higher than +200 °C
- If dimensions above 20 mm are required

Temperature

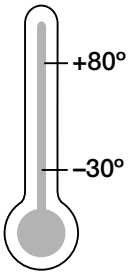

Product range

4 types
Ø 4–20 mm

igubal® Clevis Joints | Application Examples

Typical sectors of industry and application areas

- Food industry
- Packaging
- Heavy Duty
- Automotive
- Renewable energy
- Automation etc.

Improve technology and reduce costs – 110 exciting examples online

► www.igus.co.uk/igubal-applications

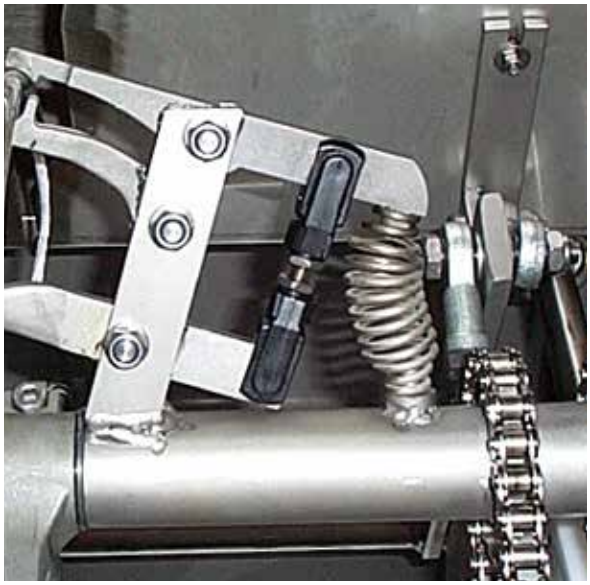

► www.igus.co.uk/food

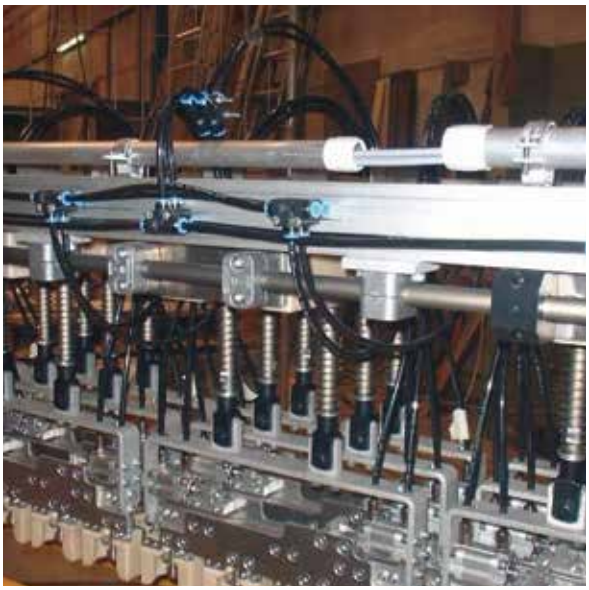

► www.igus.co.uk/packaging

► www.igus.co.uk/traffic

Pneumatic cylinder

igubal® Clevis Joints | Product Overview

GERM/GELM
Series E
Clevis joint – Standard version

▶ from page 668

GERMK/GELMK
Series E
Clevis joint with pin and circlip

▶ page 670

GERMF/GELMF
Series E
Clevis joint with spring loaded pins

▶ page 671

GERMKE/GELMKE
Series E
Clevis joint combination

▶ page 672

GERMFE/GELMFE
Series E
Clevis joint combination

▶ page 673

GEFM – Spring-loaded fixing clip
GBM – Clevis pin
GSR – Circlip

▶ page 674–675

Detectable clevis joint ▶ from page 737

My Sketches

igubal® Clevis Joints | Product Range

Clevis joint: GERM and GELM

- Light weight
- High strength under impact loads
- Corrosion resistance
- High tensile strength
- Can be used in combination with series E rod ends
- Vibration-dampening
- Noise-dampening
- Available in left- (GELM) and right-hand-thread (GERM)

Technical Data

Part number		Max. static tensile strength		Max. static radial load		Max. torque strength	Weight
		Short term	Long term	Short term	Long term		
Right-hand thread	Left-hand thread	[N]	[N]	[N]	[N]	[Nm]	[g]
GERM-04 M3.5	GELM-04 M3.5	650	325	250	125	0.4	0.9
GERM-04	GELM-04	650	325	250	125	0.4	0.9
GERM-05 DIN M4	GELM-05 DIN M4	1,000	500	250	125	0.4	1.5
GERM-05 DIN M5	GELM-05 DIN M5	1,000	500	250	125	0.5	1.5
GERM-05	GELM-05	1,200	600	250	125	0.5	2.7
GERM-05 DIN M5 LS*	GELM-05 DIN M5 LS*	1,000	500	130	65	0.5	2.3
GERM-06	GELM-06	1,400	700	300	150	1.5	2.5
GERM-06 LS*	GELM-06 LS*	1,400	700	130	65	1.5	3.6
GERM-08	GELM-08	2,700	1,350	650	325	5	6.3
GERM-10	GELM-10	4,700	2,350	800	400	15	13.2
GERM-10 F	GELM-10 F	4,700	2,350	800	400	6	13.2
GERM-12	GELM-12	5,700	2,850	900	450	20	20.2
GERM-12 F	GELM-12 F	5,700	2,850	900	450	15	20.2
GERM-14	GELM-14	6,600	3,300	1,000	500	25	29.9
GERM-14 F	GELM-14 F	6,600	3,300	1,000	500	20	29.9
GERM-15	GELM-15	3,200	1,600	1,000	500	25	30
GERM-16	GELM-16	7,500	3,750	1,200	600	30	49.9
GERM-16 F	GELM-16 F	7,500	3,750	1,200	600	27.5	49.9
GERM-17	GELM-17	3,600	1,800	1,200	600	30	50
GERM-17 F	GELM-17 F	3,600	1,800	1,200	600	27.5	50
GERM-20	GELM-20	9,500	4,750	3,000	1,500	60	105
GERM-20 M20	GELM-20 M20	9,500	4,750	3,000	1,500	80	105

* LS = longer shank

igubal® Clevis Joints | Product Range

Clevis joint: GERM and GELM

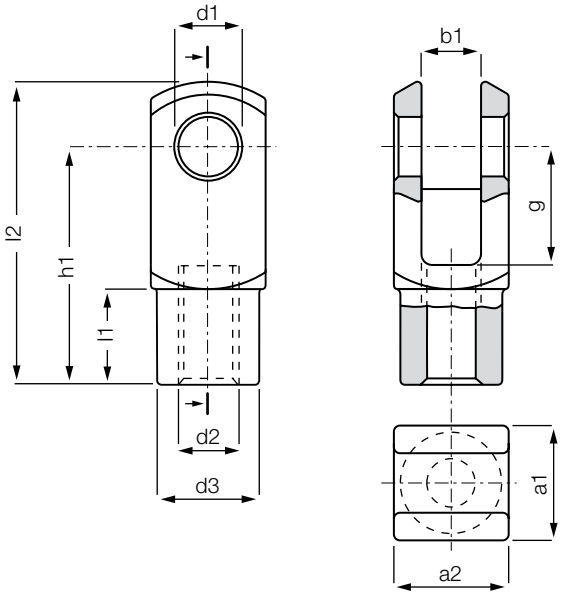

Order key

GE…M-04

- Dimension
- Metric
- Thread design
- L = left-hand thread
- R = right-hand thread
- Dimensional series E
- Clevis joint

Material:
igumid G ▶ page 1127

Dimensions [mm]

Part number		d1	g	a1	a2	b1	d2	d3	l2	h1	l1
		H9	h11	+0.3	+0.3	B13	Thread tolerance 6H	+0.3	+0.5	+0.3	+0.2
Right-hand thread	Left-hand thread			–0.16	–0.16			–0.3	–0.5	–0.3	–0.2
GERM-04 M3.5	GELM-04 M3.5	4	8	8	8	4	M3.5	8.0	21.0	16.0	6.0
GERM-04	GELM-04	4	8	8	8	4	M04	8.0	21.0	16.0	6.0
GERM-05 DIN M4	GELM-05 DIN M4	5	10	10	10	5	M04	9.0	24.5	20.0	7.5
GERM-05 DIN M5	GELM-05 DIN M5	5	10	10	10	5	M05	9.0	24.5	20.0	7.5
GERM-05	GELM-05	5	12	12	12	6	M05	10.0	31.0	24.0	9.0
GERM-05 DIN M5 LS*	GELM-05 DIN M5 LS*	5	20	10	10	5	M05	9.0	36.0	30.0	7.5
GERM-06	GELM-06	6	12	12	12	6	M06	10.0	31.0	24.0	9.0
GERM-06 LS*	GELM-06 LS*	6	24	12	12	6	M06	10.0	43.0	36.0	9.0
GERM-08	GELM-08	8	16	16	16	8	M08	14.0	42.0	32.0	12.0
GERM-10	GELM-10	10	20	20	20	10	M10	18.0	52.0	40.0	15.0
GERM-10 F	GELM-10 F	10	20	20	20	10	M10 x 1.25	18.0	51.3	40.0	15.0
GERM-12	GELM-12	12	24	24	24	12	M12	20.0	61.3	48.0	18.0
GERM-12 F	GELM-12 F	12	24	24	24	12	M12 x 1.25	20.0	61.3	48.0	18.0
GERM-14	GELM-14	14	28	27	27	14	M14	24.0	71.3	56.0	22.5
GERM-14 F	GELM-14 F	14	28	27	27	14	M14 x 1.25	24.0	71.3	56.0	22.5
GERM-15	GELM-15	15	28	27	27	14	M15	24.0	71.3	56.0	22.5
GERM-16	GELM-16	16	32	32	32	16	M16	26.0	81.9	64.0	24.0
GERM-16 F	GELM-16 F	16	32	32	32	16	M16 x 1.5	26.0	81.9	64.0	24.0
GERM-17	GELM-17	17	32	32	32	16	M17	26.0	83.0	64.0	24.0
GERM-17 F	GELM-17 F	17	32	32	32	16	M17 x 1.5	26.0	83.0	64.0	24.0
GERM-20	GELM-20	20	40	40	40	20	M20 x 1.5	34.0	105.0	80.0	30.0
GERM-20 M20	GELM-20 M20	20	40	40	40	20	M20 x 2.5	34.0	105.0	80.0	30.0

* LS = longer shank

delivery time from stock

prices price list online
www.igus.co.uk/en/germ

igubal® Clevis Joints | Product Range

Clevis joints with clevis pin and circlip: GERMK and GELMK

- Light weight
- Corrosion resistance
- High tensile strength
- Can be used in combination with series E rod ends

Order key

GE…MK-04

- Dimension
- Clevis pin and circlip
- Metric
- Thread design
- L = left-hand thread
- R = right-hand thread
- Dimensional series E
- Clevis joint

Material:
igumid G ▶ page 1127

Technical Data

Part number		Max. static tensile strength		Max. static radial load		Weight
		Short term	Long term	Short term	Long term	
Right-hand thread	Left-hand thread	[N]	[N]	[N]	[N]	[g]
GERMK-04 M3.5	GELMK-04 M3.5	500	250	250	125	1.3
GERMK-04	GELMK-04	500	250	250	125	1.3
GERMK-05 DIN M4	GELMK-05 DIN M4	800	400	250	125	2.1
GERMK-05 DIN M5	GELMK-05 DIN M5	800	400	250	125	2.1
GERMK-05	GELMK-05	900	450	250	125	3.3
GERMK-05 DIN M5 LS*	GELMK-05 DIN M5 LS*	800	400	130	65	2.9
GERMK-06	GELMK-06	1,300	650	300	150	3.3
GERMK-06 LS*	GELMK-06 LS*	1,300	650	130	65	4.4
GERMK-08	GELMK-08	2,100	1,050	650	325	7.9
GERMK-10	GELMK-10	3,000	1,500	800	400	16.4
GERMK-10 F	GELMK-10 F	3,000	1,500	800	400	16.4
GERMK-12	GELMK-12	3,500	1,750	900	450	25.3
GERMK-12 F	GELMK-12 F	3,500	1,750	900	450	25.3
GERMK-14	GELMK-14	6,100	3,050	1,000	500	31.2
GERMK-15	GELMK-15	2,800	1,400	1,000	500	38.9
GERMK-16	GELMK-16	7,000	3,500	1,200	600	60.8
GERMK-16 F	GELMK-16 F	7,000	3,500	1,200	600	60.8
GERMK-17	GELMK-17	3,600	1,800	1,200	600	62.3
GERMK-17 F	GELMK-17 F	3,600	1,800	1,200	600	62.3
GERMK-20	GELMK-20	9,000	4,500	3,000	1,500	125.2
GERMK-20 M20	GELMK-20 M20	9,000	4,500	3,000	1,500	125.2

* LS = longer shank

Single components: clevis pin GBM and circlip GSR
▶ page 675

igubal® Clevis Joints | Product Range

Clevis joints with spring-loaded fixing clip: GERMF and GELMF

Order key

GE…MF-04

- Dimension
- Spring-loaded fixing clip
- Metric
- Thread design
- L = left-hand thread
- R = right-hand thread
- Dimensional series E
- Clevis joint

- Single piece design
- Easy to assemble
- Easy assembly also in hard to reach locations
- Can be used in combination with series E rod ends
- Corrosion-resistant and lightweight

Material:
igumid G ▶ page 1127

Technical Data

Part number		Max. static tensile strength		Max. static radial load		Weight
		Short term	Long term	Short term	Long term	
Right-hand thread	Left-hand thread	[N]	[N]	[N]	[N]	[g]
GERMF-04 M3.5	GELMF-04 M3.5	500	250	250	125	1.3
GERMF-04	GELMF-04	500	250	250	125	1.3
GERMF-05 DIN M4	GELMF-05 DIN M4	800	400	250	125	2.3
GERMF-05 DIN M5	GELMF-05 DIN M5	800	400	250	125	2.3
GERMF-05 DIN M5 LS*	GELMF-05 DIN M5 LS*	800	400	250	125	2.3
GERMF-05	GELMF-05	900	450	250	125	3.8
GERMF-06	GELMF-06	1,300	650	300	150	3.9
GERMF-06 LS*	GELMF-06 LS*	1,300	650	130	65	3.9
GERMF-08	GELMF-08	2,100	1,050	650	325	9.1
GERMF-10	GELMF-10	3,000	1,500	800	400	18.2
GERMF-10 F	GELMF-10 F	3,000	1,500	800	400	18.2
GERMF-12	GELMF-12	3,500	1,750	900	450	28.6
GERMF-12 F	GELMF-12 F	3,500	1,750	900	450	28.6
GERMF-16	GELMF-16	7,000	3,500	1,200	600	61.8
GERMF-16 F	GELMF-16 F	7,000	3,500	1,200	600	61.8

* LS = longer shank

Single components: spring-loaded fixing clip GEFM
▶ page 674

delivery time from stock

prices price list online
www.igus.co.uk/en/germf

igubal® Clevis Joints | Product Range

Clevis joints combination: GERMKE and GELMKE

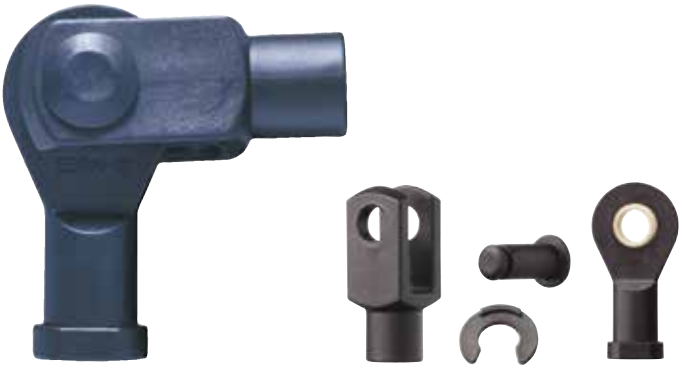

Order key

GE…MKE-05

- Dimension
- With clevis pin, circlip and rod end
- Metric
- Thread design
- L = left-hand thread
- R = right-hand thread
- Dimensional series E
- Clevis joint

- Light weight
- Corrosion resistance
- High tensile strength
- Can be used in combination with series E rod ends

Material:
igumid G ▶ page 1127

Technical Data

Part number		Max. static tensile strength		Max. static radial load		Weight
		Short term	Long term	Short term	Long term	
Right-hand thread	Left-hand thread	[N]	[N]	[N]	[N]	[g]
GERMKE-05	GELMKE-05	900	450	150	75	6.4
GERMKE-06	GELMKE-06	1.300	650	200	100	7.3
GERMKE-08	GELMKE-08	2.000	1.000	450	225	14.6
GERMKE-10	GELMKE-10	2.300	1.150	500	250	27.1
GERMKE-10 F	GELMKE-10 F	2.300	1.150	500	250	27.1
GERMKE-12	GELMKE-12	3.300	1.650	550	275	42.7
GERMKE-12 F	GELMKE-12 F	3.300	1.650	550	275	42.7
GERMKE-15	GELMKE-15	2.800	1.400	800	400	68.4
GERMKE-16	GELMKE-16	5.000	2.500	850	425	86.9
GERMKE-16 F	GELMKE-16 F	5.000	2.500	850	425	86.9
GERMKE-17	GELMKE-17	3.600	1.800	1.100	550	98.3
GERMKE-17 F	GELMKE-17 F	3.600	1.800	1.100	550	98.3
GERMKE-20	GELMKE-20	7.200	3.600	1.800	900	175.2
GERMKE-20 M20	GELMKE-20 M20	7.200	3.600	1.800	900	175.2

Clevis joints with spring-loaded fixing clip, can be used in combination with series E rod ends, EBRM and EARM ▶ page 646–649

delivery time from stock

prices price list online
www.igus.co.uk/en/germke

igubal® Clevis Joints | Product Range

Clevis joints combination: GERMFE and GELMFE

Order key

GE…MFE-05

- Dimension
- With spring-loaded fixing clip and rod end
- Metric
- Thread design
- L = left-hand thread
- R = right-hand thread
- Dimensional series E
- Clevis joint

Material:
igumid G ▶ page 1127

Technical Data

Part number		Max. static tensile strength		Max. static radial load		Weight
		Short term	Long term	Short term	Long term	
Right-hand thread	Left-hand thread	[N]	[N]	[N]	[N]	[g]
GERMFE-05	GELMFE-05	900	450	150	75	7.0
GERMFE-06	GELMFE-06	1,300	650	200	100	7.9
GERMFE-08	GELMFE-08	2,000	1,000	450	225	15.9
GERMFE-10	GELMFE-10	2,300	1,150	500	250	29.2
GERMFE-10 F	GELMFE-10 F	2,300	1,150	500	250	29.2
GERMFE-12	GELMFE-12	3,300	1,650	550	275	46.0
GERMFE-12 F	GELMFE-12 F	3,300	1,650	550	275	46.0
GERMFE-16	GELMFE-16	5,000	2,500	850	425	94.4
GERMFE-16 F	GELMFE-16 F	5,000	2,500	850	425	94.4

Clevis joints with spring-loaded fixing clip, can be used in combination with series E rod ends, EBRM and EARM ▶ page 646–649

delivery time from stock

prices price list online
www.igus.co.uk/en/germfe

igubal® Clevis Joints | Product Range

Spring-loaded fixing clip: GEFM

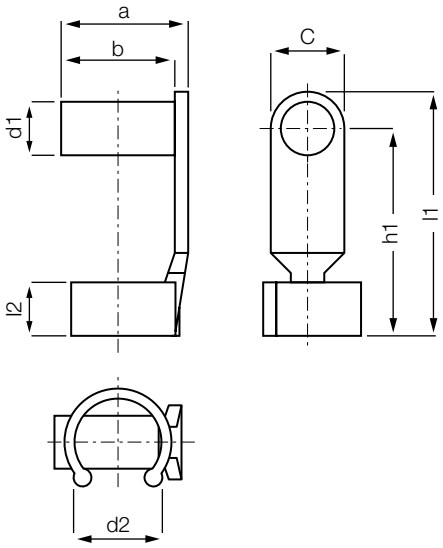

Material:
igumid G ▶ page 1127

Dimensions [mm]

Part number	d1	d2	a	b	C	l1	h1	l2	Weight
	h11					±0.5			[g]
GEFM-04	4	8	9.5	10.5	8	19	15	4.5	0.5
GEFM-05 DIN	5	9	12	13.5	8	23	19	5.5	0.8
GEFM-05 DIN M5 LS*	5	9	12	13.5	8	33	29	5.5	1.0
GEFM-05	5	10	14	15.5	8	27	23	6.5	1.1
GEFM-06 LS*	6	10	14	15.5	8	39	35	6.5	1.0
GEFM-06	6	10	14	15.5	8	27	23	6.5	1.2
GEFM-08	8	14	19	21.0	11	35.5	30	8.0	2.8
GEFM-10	10	18	23	25.5	14	45	38	10.0	5.0
GEFM-12	12	20	28	31.0	16	53	45	12.0	8.3
GEFM-16	16	26	36	40.0	22	73	62	16.0	18.3

* LS = longer shank

delivery time from stock

prices price list online
www.igus.co.uk/en/gefm

igubal® Clevis Joints | Product Range

Clevis pin: GBM

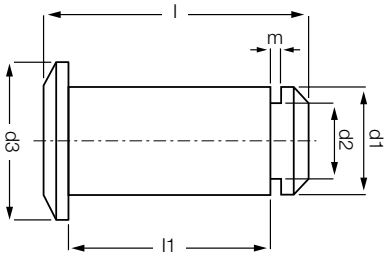

Material:
igumid G ▶ page 1127

Dimensions [mm]

Part number	d1 h11	d2	d3	l	l1	m	Clip	Weight [g]
GBM-04	4	3.2	7	12.5	8	1.05	GSR-04	0.3
GBM-05	5	4	8	16.5	12	1.15	GSR-06	0.5
GBM-05 DIN	5	4	8	14.5	10	1.15	GSR-06	0.5
GBM-06	6	4	9	16.5	12	1.15	GSR-06	0.7
GBM-08	8	5	12	21.5	16	1.15	GSR-08	1.5
GBM-10	10	7	15	27	20	1.35	GSR-10	3.0
GBM-12	12	9	18	31.5	24	1.5	GSR-12	4.8
GBM-14	14	12	22	36	27	1.7	GSR-16	5.7
GBM-15	15	12	23	36	27	1.7	GSR-16	8.3
GBM-16	16	12	24	42	32	1.7	GSR-16	10.4
GBM-17	17	12	25	42	32	1.7	GSR-16	12.3
GBM-20	20	15	30	51	40	2.0	GSR-20	19.2

Circlip: GSR

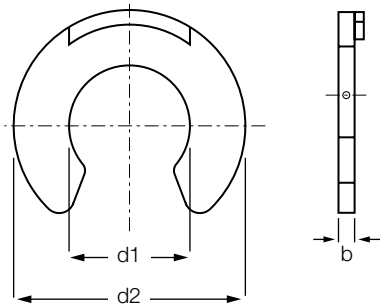

Material:
POM ▶ page 1128

Dimensions [mm]

Part number	d1	d2	b	Weight [g]
GSR-04	3.2	7	1.0	0.05
GSR-06	4	9	1.1	0.06
GSR-08	5	11	1.1	0.12
GSR-10	7	14	1.3	0.16
GSR-12	9	18.5	1.4	0.31
GSR-16	12	23	1.6	0.58
GSR-20	15	28	1.9	0.96

delivery time from stock

prices price list online
www.igus.co.uk/en/gbm

My Sketches

igubal® Pillow Block Bearings

- Maintenance-free, dry-running
- High tensile strength
- High endurance strength
- Lubrication-free
- Chemical-resistant
- High radial loads

igubal® Pillow Block Bearings

igubal® pillow block bearings are bearing units especially easy to install and which are able to compensate alignment errors and prevent edge loads.

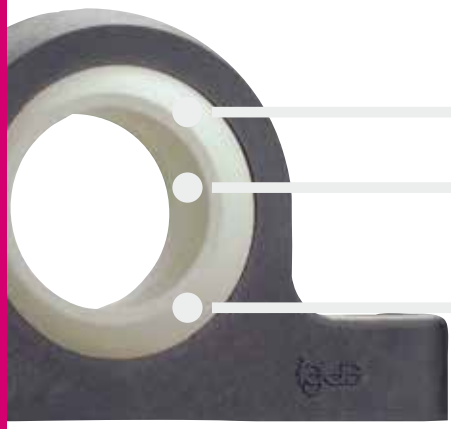

Maintenance-free, dry-running

High stiffness

High strength

Maintenance-free, self-lubricating

Can be used in liquid media

High radial loads

When to use it?

- If chemical resistance is required
- If a cost-effective option is required
- If you need dirt-resistant bearings
- To adjust misalignment
- If you need split components

When not to use it?

- If temperatures are higher than +80 °C
- If an integrated fixing collar is required
- If diameters above 50 mm are required
- If rotation speeds higher than 0.5 m/s are required

Temperature

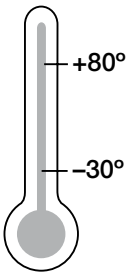

Product Range

6 types
Ø 5–50 mm

igubal® Pillow Block Bearings | Application Examples

Typical sectors of industry and application areas

● Plant design ● Machine building
● Packaging etc.

Improve technology and reduce costs – 110 exciting examples online

▶ **www.igus.co.uk/igubal-applications**

Stone processing

▶ www.igus.co.uk/solar-technology

Paper industry

▶ www.igus.co.uk/packaging

igubal® Pillow Block Bearings | Technical Data

Advantages

- Maintenance-free, dry running
- High stiffness
- High strength under impact loads
- Compensation for alignment errors
- Compensation for edge loads
- Corrosion-free
- Chemically resistant
- Vibration damping
- Suitable for rotating, oscillating and linear movements
- Light weight
- High radial loads
- Can be used in liquid media
- Space-saving design
- Easy to install
- Predictable lifetime
- Maintenance-free, lubrication-free

Areas of Application

The ability to pivot allows igubal® pillow block bearings to compensate for misalignment and possible shaft deflection. Applications in which these effects cannot be prevented are suitable for igubal® pillow block bearings.

Tolerances

Maintenance-free igubal® pillow block bearings are designed with an inside diameter tolerance of E10. The shaft should be made to tolerance class h6 to h9. These recommended tolerances allow for changes in the bearing due to temperature.

Fitting

igubal® pillow block bearings are designed for mounting with 2 bolts. Precision mounting of the bearing is not necessary, since the spherical ball compensates for alignment errors.

Product Range

igubal® pillow block bearings are available in the dimensional series K and E for shaft diameters from 5 to 50 mm. The dimensional series K is available in imperial dimensions. More dimensions on request.

Pivot angle

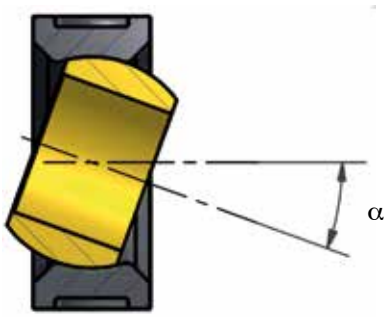

igubal® Pillow Block Bearings | Product Overview

KSTM/KSTI
Series K
standard version

▶ page 682

KSTM-GT
Series K
split housing

▶ page 684

ESTM
Series E
standard version

▶ page 685

ESTM-GT
Series E
split housing

▶ page 686

ESTM-SL
Series E
slim line

▶ page 687

AD-01-ESTM
Adapter for series E
standard version

▶ page 688

igubal® Pillow Block Bearing | Product Range

Pillow block bearing KSTM and KSTI

- Maintenance-free, dry-running
- High stiffness
- High strength under impact loads
- Compensation of misalignment and edge loads
- Corrosion- and chemical-resistant
- High vibration-dampening
- Suitable for rotating, oscillating and linear movements
- Light weight
- Dimensional series K according to standard DIN ISO 12240

Technical Data

Part number	Max. static tensile strenght		Max. axial static compressive strength	Max. torque for longitudinal holes	Weight
	Short term	Long term			
	[N]	[N]	[N]	[Nm]	[g]
KSTM-05	700	350	300	0.6	1.7
KSTM-06	1,100	550	300	1.3	2.9
KSTM-08	1,300	650	400	1.3	4.6
KSTM-10	1,500	750	500	2.5	8.6
KSTM-12	2,200	1,100	600	2.5	11.8
KSTM-14	2,400	1,200	600	4.5	18.4
KSTM-16	3,000	1,500	1,800	4.5	23.7
KSTM-18	3,500	1,750	1,200	10.5	32.2
KSTM-20	4,700	2,350	1,300	10.5	40
KSTM-22	6,100	3,050	1,400	10.5	54
KSTM-25	6,600	3,300	1,600	10.5	75.3
KSTM-30	8,100	4,050	2,100	21.5	116.8

Technical Data

Part number	Max. static tensile strenght		Max. axial static compressive strength	Max. torque for longitudinal holes	Weight
	Short term	Long term			
	[N]	[N]	[N]	[Nm]	[g]
KSTI-03	550	275	300	0.6	1.7
KSTI-04	600	300	300	0.6	2.8
KSTI-05	800	400	400	0.8	4.5
KSTI-06	1,000	500	500	1.3	7.5
KSTI-07	1,100	550	600	2.5	9.7
KSTI-08	1,200	600	600	2.5	13.5
KSTI-10	2,100	1,050	800	2.5	21.5
KSTI-12	3,100	1,550	1,200	4.5	33.4
KSTI-16	5,400	2,700	1,600	10.5	85.8

The maximum torques for longitudinal holes correspond to the permissible torque of the fixing screws (fixing category 5.8).

igubal® Pillow Block Bearing | Product Range

Pillow block bearing KSTM and KSTI

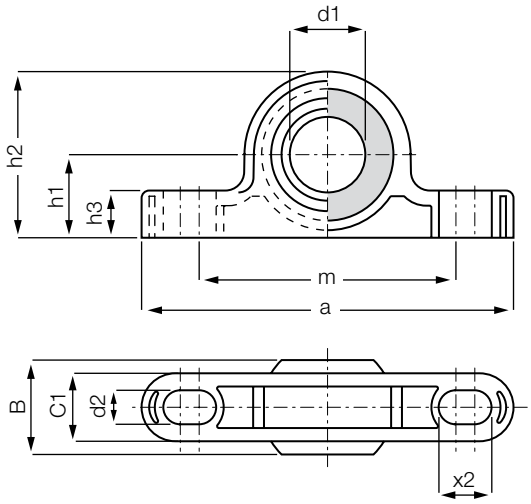

Order key

KSTM-05

- Dimension
- Metric
- Pillow block bearing
- Dimensional series K

Material:
Housing: **igumid G** ▶ **page 1127**
Spherical ball: **iglidur® W300** ▶ **page 729**

Dimensions [mm]

Part number	d1 E10	B	C1	h1	h2	m	a	h3	d2	X2	Max. pivot angle
KSTM-05	5	8	6.0	7	14	25	34	4	3.3	5	30°
KSTM-06	6	9	7.0	10	18	33	43	5.5	4.5	6	29°
KSTM-08	8	12	9.0	10	20	33	47	6	4.5	7	25°
KSTM-10	10	14	10.5	14	26	46	62	7.5	5.5	8	25°
KSTM-12	12	16	12.0	14	28	46	65	8.5	5.5	9	25°
KSTM-14	14	19	13.5	18	34	60	82	9.5	6.6	11	23°
KSTM-16	16	21	15.0	18	36	60	86	10.5	6.6	12	23°
KSTM-18	18	23	16.5	22	42	68	93	11.5	9.0	13	23°
KSTM-20	20	25	18.0	22	44	68	98	13	9.0	14	23°
KSTM-22	22	28	20.0	24	48	74	108	14	9.0	16	22°
KSTM-25	25	31	22.0	27	54	86	124	16	9.0	17	22°
KSTM-30	30	37	25.0	32	64	96	139	17	11.0	20	22°

Dimensions [Inch]

Part number	d1 E10	B	C1	h1	h2	m	a	h3	d2	X2	Max. pivot angle
KSTI-03	.1900	.312	.234	.290	.566	1.000	1.4000	.165	.137	.200	25°
KSTI-04	.2500	.375	.250	.390	.705	1.250	1.7500	.205	.137	.250	25°
KSTI-05	3125	.437	.312	.430	.824	1.350	1.9500	.236	.150	.280	25°
KSTI-06	.3750	.500	.359	.550	1.022	1.800	2.4000	.376	.180	.300	22°
KSTI-07	.4375	.562	.406	.570	1.082	1.850	2.5000	.315	.205	.330	22°
KSTI-08	.5000	.625	.453	.600	1.191	2.000	2.8000	.354	.205	.380	22°
KSTI-10	.6250	.750	.484	.700	1.409	2.300	3.3500	.413	.205	.470	22°
KSTI-12	.7500	.875	.593	.860	1.687	2.700	3.7500	.472	.270	.530	22°
KSTI-16	1.0000	1.375	1.005	1.100	2.163	3.500	5.0000	.630	.520	.680	20°

delivery time **from stock**

prices **price list online**
www.igus.co.uk/en/kstm

igubal® Pillow Block Bearing | Product Range

Pillow block bearing with split housing: KSTM-GT

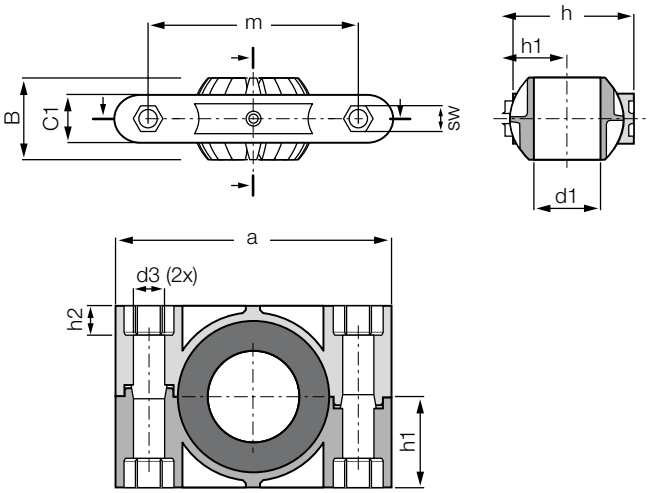

Order key

KSTM-GT40-GT

- Split ball
- Inner diameter
- Split pillow block
- Metric
- Pillow block bearing
- Dimensional series K

Material:
Housing: **RN33** ▶ **page 1128**
Spherical ball: **iglidur® J** ▶ **page 732**

- Fitting is easy and does not require shaft removal
- Maintenance-free, dry-running
- For high static loads
- Space- and weight-saving design
- Mounting: M12
- High stiffness and fatigue strength
- Predictable lifetime
- Dimensional series K accord. to standard DIN ISO 12240

Technical Data

Part number	Max. radial tensile strength		Max. axial tensile strength		Max. torque through ball	fixing holes	Weight
	Short term	Long term	Short term	Long term			
	[N]	[N]	[N]	[N]	[Nm]	[Nm]	[g]
KSTM-GT35*	11,000	5,500	2,500	1,250	20	15	250.3
KSTM-GT40	11,000	5,500	2,500	1,250	20	15	235
KSTM-GT40-GT**	11,000	5,500	2,500	1,250	20	15	235
KSTM-GT45*	15,000	7,500	3,000	1,500	20	20	405.2
KSTM-GT50	15,000	7,500	3,000	1,500	20	20	389.2
KSTM-GT50-GT**	15,000	7,500	3,000	1,500	20	20	389.2

Dimensions [mm]

Part number	d1	d3	h	h1	h2	SW	a	m	C1	B	Max. pivot angle
	E10										
KSTM-GT35*	35.0	13.5	79.0	39.5	12.6	19.0	120.5	91.0	29.5	48.5	24°
KSTM-GT40	40.0	13.5	79.0	39.5	12.6	19.0	120.5	91.0	29.5	48.5	24°
KSTM-GT40-GT**	40.0	13.5	79.0	39.5	12.6	19.0	120.5	91.0	29.5	48.5	24°
KSTM-GT45*	45.0	13.5	100.0	50.0	12.6	19.0	149.0	114.0	35.0	60.0	24°
KSTM-GT50	50.0	13.5	100.0	50.0	12.6	19.0	149.0	114.0	35.0	60.0	24°
KSTM-GT50-GT**	50.0	13.5	100.0	50.0	12.6	19.0	149.0	114.0	35.0	60.0	24°

* Diameter given by iglidur® J bore reducer; ** Split pillow block with split ball

delivery time from stock

prices price list online
www.igus.co.uk/en/kstm-gt

igubal® Pillow Block Bearing | Product Range

Pillow block bearing ESTM

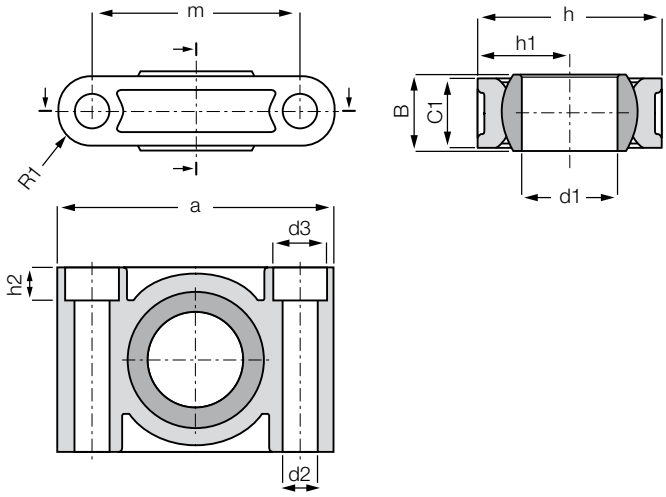

- High radial loads
- Can be used in liquid media

Order key

ESTM-08

- Dimension
- Metric
- Pillow block bearing
- Dimensional series E

Material:
Housing: **igumid G** ▶ **page 1127**
Spherical ball: **iglidur® W300** ▶ **page 729**

- Space-saving design, easy to fit
- Predictable lifetime
- Maintenance-free, self-lubricating
- Dimensional series E acc. to standard DIN ISO 12240
- Adapter available ▶ **page 688**

Technical Data

Part number	Max. radial tensile strength		Max. radial compressive strength		Max. axial strength		Max. torque fixing holes	Weight
	Short term, [N]	Long term, [N]	Short term, [N]	Long term, [N]	Short term, [N]	Long term, [N]	[Nm]	[g]
ESTM-08	2,500	1,250	4,300	2,150	600	300	1.3	5
ESTM-10	3,400	1,700	5,300	2,650	700	350	2.5	7.1
ESTM-12	4,500	2,250	6,500	3,250	750	375	2.5	9
ESTM-16	6,700	3,350	8,500	4,250	1,100	550	4.5	17.5
ESTM-20	8,500	4,250	11,000	5,750	1,400	700	4.5	27.4
ESTM-25	13,500	6,750	18,500	9,250	2,300	1,150	10.5	50.8
ESTM-30*	10,000	5,000	16,500	8,250	2,500	1,250	10.5	79.7

*** Due to the different manufacturing method, the load values are lower than 25mm diameter**

Dimensions [mm]

Part number	d1, E10	d2	d3	h	h1	h2	a	m	C1	B	R1	Max. pivot angle
ESTM-08	8.0	4.5	–	19	9.5	–	31.0	22.0	9.0	8.0	4.5	22°
ESTM-10	10.0	5.5	–	22	11	–	36.0	26.0	10.0	9.0	5.0	22°
ESTM-12	12.0	5.5	–	26	13	–	38.0	28.0	10.0	10.0	5.0	22°
ESTM-16	16.0	6.6	10.6	34.0	17.0	6.4	50.0	37.0	13.0	13.0	6.5	22°
ESTM-20	20.0	9.0	14.0	40.0	20.0	8.6	62.0	46.0	16.0	16.0	8.0	22°
ESTM-25	25.0	9.0	14.0	48.0	24.0	8.6	72.0	54.0	18.0	20.0	9.0	20°
ESTM-30	30.0	11.0	17.0	56.0	28.0	10.6	86.0	64.0	22.0	22.0	11.0	20°

Spherical ball materials to choose ▶ page 725


J4VEM: clearance-free, preloaded


JEM: low moisture absorption


REM: low-cost


J4EM: low-cost and low moisture absorption

igubal® Pillow Block Bearing | Product Range

Pillow block bearing with split housing and split ball: ESTM-GT…-GT

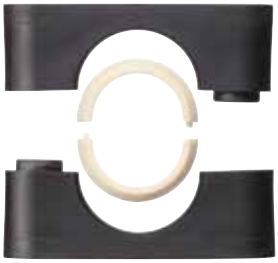

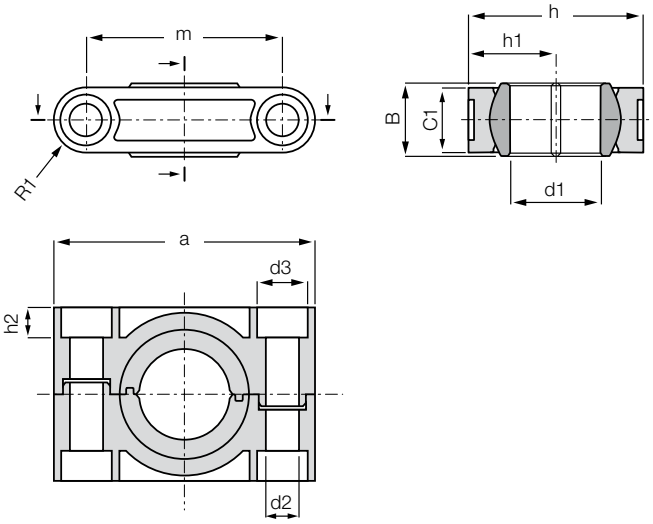

Order key

ESTM-GT16-GT

- Split ball
- Dimension
- Split
- Metric
- Pillow block bearing
- Dimensional series E

Material:
Housing: **RN33** ▶ **page 1128**
Spherical ball: **iglidur® J** ▶ **page 732**

- Save time during assembly and disassembly of shafts
- Low installation space and low weight
- High stiffness and fatigue strength
- Spherical ball material iglidur® J for low moisture absorption
- Ideal for outdoor use
- Dimensional series E according to standard DIN ISO 12240
- Adapter available ▶ **page 688**

Technical Data

Part number	max. static radial load		max. static radial compressive force		Weight
	Short term	Long term	Short term	Long term	
	[N]	[N]	[N]	[N]	[g]
ESTM-GT16-GT	2,500	1,250	4,000	2,000	18
ESTM-GT20-GT	3,500	1,750	6,000	3,000	28
ESTM-GT25-GT	5,000	2,500	7,000	3,500	52
ESTM-GT30-GT	5,500	2,750	10,000	5,000	84

Dimensions [mm]

Part number	d1	d2	d3	h	h1	h2	a	m	C1	B	R1	Max. pivot angle
	E10											
ESTM-GT16-GT	16.0	6,6	10.6	34.0	17.0	6.4	50.0	37.0	13.0	13.0	6.5	22°
ESTM-GT20-GT	20.0	9,0	14.0	40.0	20.0	8.6	62.0	46.0	16.0	16.0	8.0	22°
ESTM-GT25-GT	25.0	9,0	14.0	48.0	24.0	8.6	72.0	54.0	18.0	20.0	9.0	22°
ESTM-GT30-GT	30.0	11.0	17.0	56.0	28.0	10.6	86.0	64.0	22.0	22.0	11.0	22°

delivery time from stock

prices price list online
www.igus.co.uk/en/estm-gt

igubal® Pillow Block Bearing | Product Range

Pillow block bearing Slim line: ESTM SL

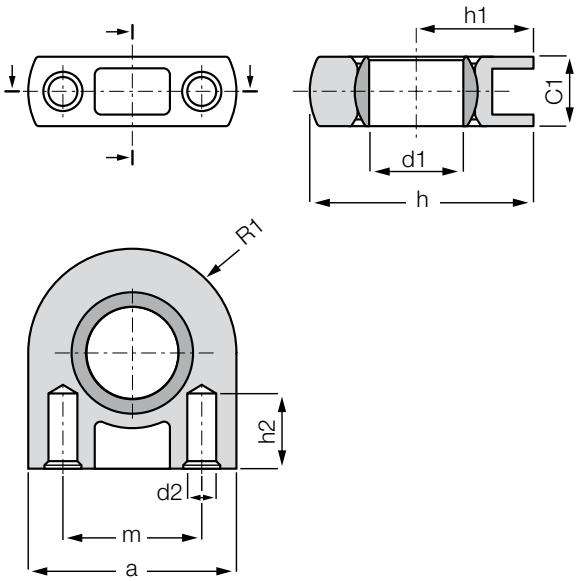

Order key

ESTM-05 SL

- Slim line
- Dimension
- Metric
- Pillow block bearing
- Dimensional series E

Material:
Housing: **igumid G** ▶ **page 1127**
Spherical ball: **iglidur® J** ▶ **page 732**

- Light weight
- Space saving
- Low-cost
- Predictable lifetime
- Maintenance- and lubricant-free
- With M3 thread, e. g. ESTM-10-SL-M3
- For self tapping screw with outer diameter 3.5 mm
- Dimensional series E according to standard DIN ISO 12240

Technical Data

Part number	Max. radial tensile strength		Max. radial compressive strength		Max. lateral strength		Max. axial strength		Weight
	Short term	Long term	Short term	Long term	Short term	Long term	Short term	Long term	
	[N]	[N]	[N]	[N]	[N]	[N]	[N]	[N]	[g]
ESTM-05 SL	1,500	750	1,400	700	900	450	150	75	1.6
ESTM-06 SL	1,500	750	1,400	700	900	450	150	75	1.7
ESTM-08 SL	1,600	800	1,400	700	950	475	100	50	1.7
ESTM-10 SL	1,600	800	1,400	700	1,000	500	100	50	1.9

Dimensions [mm]

Part number	d1	d2	h	h1	h2	a	m	C1	R1	Max. pivot angle
	E10									
ESTM-05 SL	5.0	2.5	18.0	10.0	6.5	16.0	10.0	6.0	8.0	17°
ESTM-06 SL	6.0	2.5	18.0	10.0	6.5	16.0	10.0	6.0	8.0	17°
ESTM-08 SL	8.0	2.5	19.0	10.0	6.5	18.0	12.0	6.0	9.0	17°
ESTM-10 SL	10.0	2.5	20.0	10.0	6.5	20.0	14.0	6.0	10.0	17°

delivery time from stock

prices price list online
www.igus.co.uk/en/estm-sl

igubal® Pillow Block Bearings | Product Range

Adapter for pillow block bearings of series E

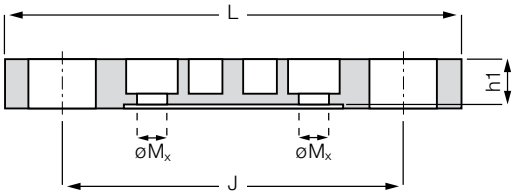

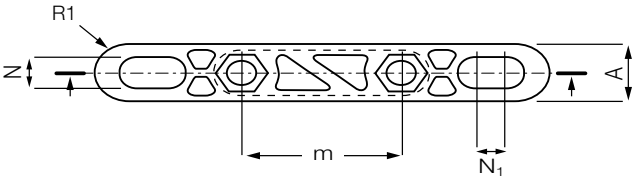

Order key

AD-01-ESTM-20

- Dimension
- Metric
- Pillow block bearing
- Dimensional series E
- Adapter

- Same dimensions as metal pillow blocks
- Light weight
- For pillow block bearings of series E (ESTM, ESTM-GT)
- Corrosion- and chemical-resistant
- Fits directly
- Space-saving
- Same screws as tradtional metallic versions

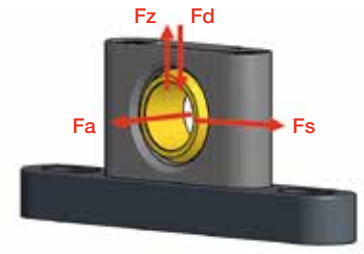

Technical Data

Part number	Max. radial tensile strength [Fz]		Max. radial compressive strength [Fd]		lateral strength [Fs]		Max. axial strength [Fa] (Tension/pression)		Weight
	Short term	Long term	Short term	Long term	Short term	Long term	Short term	Long term	
	[N]	[N]	[N]	[N]	[N]	[N]	[N]	[N]	[g]
AD-01-ESTM-20*	2,400	1,200	10,000	5,000	3,000	1,500	1,200	600	29.8
AD-01-ESTM-25**	2,400	1,200	10,000	5,000	3,000	1,500	1,200	600	74
AD-01-ESTM-30**	2,400	1,200	10,000	5,000	3,000	1,500	1,200	600	124

Dimension [mm]

Part number	for ESTM-...	d1	L	A	R1	J	h1	N	N1	m	Mx
AD-01-ESTM-20*	ESTM-20	20	130	20	10.0	97	14.0	11	8	46	M8
AD-01-ESTM-25**	ESTM-25	25	130	20	10.0	102	12.5	11	9	54	M8
AD-01-ESTM-30**	ESTM-30	30	158	25	12.5	118	14.9	14	10	64	M10

* Material: plastic

** Material: aluminum

delivery time from stock

prices price list online
www.igus.co.uk/en/ad-01-estm

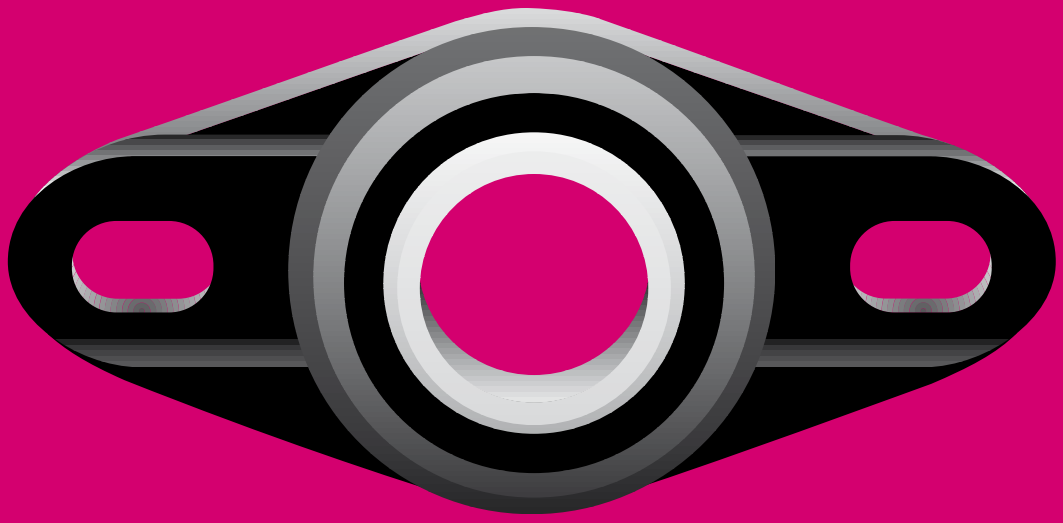

igubal® Flange Bearings

- Maintenance-free, dry-running
- High tensile strength
- High endurance strength
- Compensation of alignment errors
- Compensation of edge loads
- Light weight

igubal® Flange Bearings

igubal® flange bearings have been developed for the support of both the centre and ends of shafts. Like all igubal® products, these bearings consist of an igumid G housing and an iglidur® W300 spherical ball. igubal® flange bearings are made to the dimensional series E and are offered with two or four mounting holes.

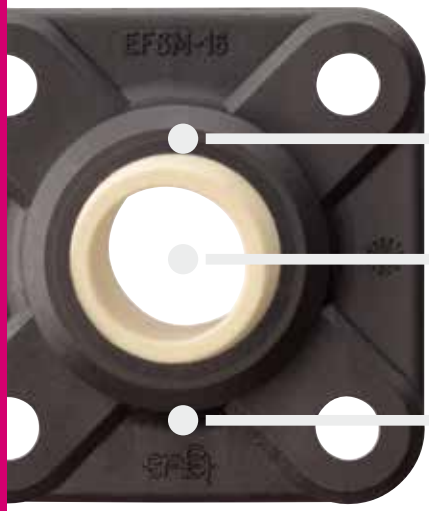

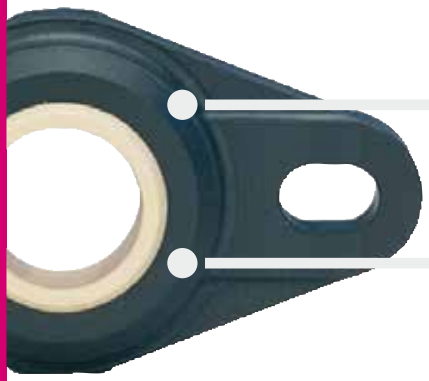

When to use it?

- If chemical resistance is required
- If a cost-effective option is requested
- If you need dirt-resistant bearings
- To adjust misalignment
- If you need split components

When not to use it?

- If temperatures are higher than +200 °C
  ▶ HT Version, page 699-700
- If an integrated fixing collar is required
- If diameters above 50 mm are necessary
- If rotation speeds higher than 0.5 m/s are required

Temperature

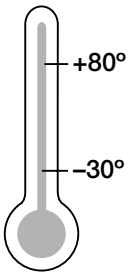

Standard

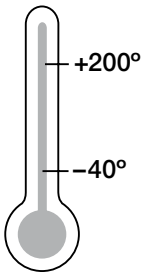

High temperature (HT)

Product Range

5 types
Ø 4–50 mm

More information ▶ www.igus.co.uk/en/igubal-flange

igubal® Flange Bearings | Application Examples

Typical sectors of industry and application areas

- Plant design
- Automation
- Agricultural machines
- Machine building
- Food industry etc.

Improve technology and reduce costs – 110 exciting examples online

▶ **www.igus.co.uk/igubal-applications**

Conveyor technique

▶ www.igus.co.uk/agriculture

▶ Rotary-sorter

▶ www.igus.co.uk/food

igubal® Flange Bearings | Technical Data

General Properties

igubal® Flange bearings have been developed for supporting the centre or ends of shafts. Like all igubal® products, these bearings consist of an igumid G housing and an iglidur® W300 spherical ball. igubal® flange bearings are made to the dimensional series E and are offered with two or four mounting holes.

Areas of Application

Since igubal® flange bearings are made for maintenance-free use, they are especially suitable for applications in which access to the bearing is limited, in moist or wet environments or clean room environments. igubal® flange bearings are also found in electric brushes, awnings, conveyor technology, and bakery machines.

Installation

igubal® flange bearings are designed for mounting with 2 or 4 bolts, depending on the design. The 2-hole types are provided with elongated holes, which allow easy and flexible installation. An exact positioning of the bearing housing is not necessary, since the flange bearing compensates for alignment errors.

Pivot angle

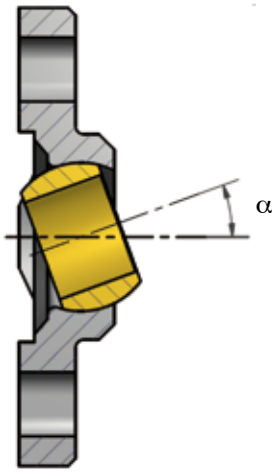

igubal® Flange Bearings | Product Overview

EFOM
Series E
2 mounting holes

▶ from page 694

EFSM
Series E
4 mounting holes

▶ from page 696

KFSM-GT
Series K
4 mounting holes
Split housing

▶ page 698

EFOM-HT
Series E
High temperature

▶ page 699

EFSM-HT
Series E
High temperature

▶ page 700

igubal® Flange Bearings | Product Range

Flange bearing with 2 mounting holes: EFOM

- iglidur® W300 highly wear resistant spherical ball
- Easy to install
- Compensation of misalignment errors
- Corrosion-resistance
- Light weight
- Maintenance-free, self-lubricating

Technical Data

Part number	Maximum static axial load		Maximum static radial load		Maximum static torque	Max. pivot angle	Weight
	Short term	Long term	Short term	Long term	Holes		
	[N]	[N]	[N]	[N]	[Nm]		[g]
EFOM-04	400	200	750	375	0.6	28°	1.9
EFOM-05	400	200	750	375	0.6	29°	2.3
EFOM-06	500	250	800	400	0.6	25°	1.8
EFOM-08	700	350	1,100	550	1.3	25°	4.1
EFOM-10	850	425	2,000	1,000	2.5	25°	6.8
EFOM-12	1,100	550	2,200	1,100	2.5	21°	8.9
EFOM-15	1,300	650	2,400	1,200	4.5	20°	15
EFOM-16	1,400	700	2,800	1,400	4.5	27°	17.7
EFOM-17	1,800	900	3,200	1,600	4.5	21°	24.9
EFOM-20	1,800	900	5,500	2,750	10.5	19°	32.8
EFOM-25	3,000	1,500	6,000	3,000	10.5	15°	58.5
EFOM-30	3,500	1,750	6,500	3,250	21.5	14°	78.9

Spherical ball materials to choose ▶ page 725

J4VEM: clearance-free, preloaded

JEM: low moisture absorption

REM: low-cost

J4EM: low-cost and low moisture absorption

igubal® Flange Bearings | Product Range

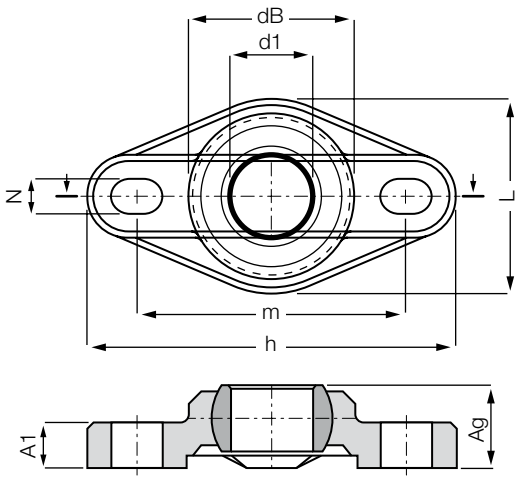

Order key

EFOM-04

- Inner diameter
- Metric
- 2 holes
- Flange bearing
- Dimensional series E

Material:
Housing: **igumid G** ▶ **page 1127**
Spherical ball: **iglidur® W300** ▶ **page 729**

Dimensions [mm]

Part number	d1 E10	dB	h Length	L Width	m Hole pitch ±0.1	A1 Height of plate +0.1	Ag Total height	N Bore diameter d x l
EFOM-04	4	14.0	33.8	16.0	24.0	4.5	8.0	3.2 x 5.0
EFOM-05	5	14.0	33.8	16.0	24.0	4.5	8.5	3.2 x 5.0
EFOM-06	6	14.0	33.8	16.0	24.0	4.5	8.5	3.2 x 5.0
EFOM-08	8	18.0	44.2	22.0	31.0	5.5	10.5	4.3 x 6.5
EFOM-10	10	22.2	52.0	26.0	36.0	6.5	12.0	5.3 x 8.0
EFOM-12	12	25.0	56.7	31.0	41.0	7.0	13.0	5.3 x 8.0
EFOM-15	15	29.8	68.6	36.0	50.0	8.5	15.5	6.4 x 10.0
EFOM-16	16	32.0	72.6	38.0	53.0	10.0	17.5	6.4 x 10.1
EFOM-17	17	34.8	74.6	41.0	55.0	10.0	18.0	6.4 x 10.2
EFOM-20	20	40.0	89.0	47.0	65.0	11.0	20.0	8.4 x 12.5
EFOM-25	25	48.5	101.0	58.5	75.0	14.0	25.0	8.4 x 12.6
EFOM-30	30	55.0	118.0	65.0	87.5	15.0	26.0	10.5 x 16.0

Standard tolerances:
from 0.5 to 6 mm: ±0.1 mm
over 6 to 30 mm: ±0.2 mm
over 30 to 120 mm: ±0.3 mm

delivery time **from stock**

prices **price list online**
www.igus.co.uk/en/efom

igubal® Flange Bearings | Product Range

Flange bearing with 4 mounting holes: EFSM

- Spherical ball made from wear-resistant iglidur® W300
- Easy assembly
- Compensation of alignment errors
- Corrosion-resistant
- Light weight
- Maintenance-free, dry-running

Technical Data

Part number	Maximum static axial load		Maximum static radial load		Maximum static torque	Max. pivot angle	Weight
	Short term	Long term	Short term	Long term	Holes		
	[N]	[N]	[N]	[N]	[Nm]		[g]
EFSM-04	200	100	1,000	500	0.6	28°	2.6
EFSM-05	300	150	1,000	500	0.6	29°	2.7
EFSM-06	300	150	1,000	500	0.6	25°	2.8
EFSM-08	450	225	1,400	700	1.3	25°	5.9
EFSM-10	700	350	2,000	1,000	2.5	25°	9.1
EFSM-12	850	425	2,500	1,250	2.5	21°	11
EFSM-15	1,100	550	3,000	1,500	4.5	20°	20.2
EFSM-16	1,350	675	3,200	1,600	4.5	27°	23.3
EFSM-17	1,600	800	3,400	1,700	4.5	21°	27.9
EFSM-20	2,000	1,000	4,000	2,000	10.5	19°	45
EFSM-25	2,400	1,200	5,600	2,800	10.5	15°	76
EFSM-30	2,800	1,400	6,000	3,000	21.5	14°	100.7

Spherical ball materials to choose ▶ page 725

J4VEM: clearance-free, preloaded

JEM: low moisture absorption

REM: low-cost

J4EM: low-cost and low moisture absorption

igubal® Flange Bearings | Product Range

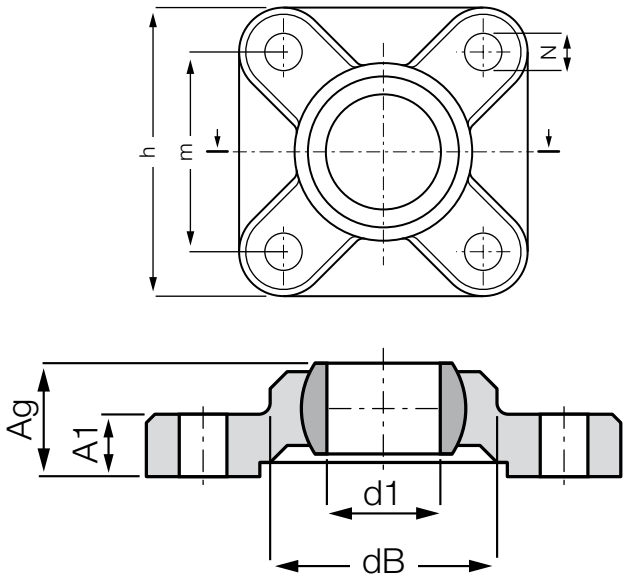

Order key

EFSM-04

- Inner diameter
- Metric
- 4 holes
- Flange bearing
- Dimensional series E

Material:
Housing: **igumid G** ▶ **page 1127**
Spherical ball: **iglidur® W300** ▶ **page 729**

Dimensions [mm]

Part number	d1 E10	dB	h Width	m Hole pitch ±0.1	A1 Height of plate	Ag Total height	N Bore d
EFSM-04	4	14.0	25.0	17.0	4.5	8.5	3.2
EFSM-05	5	14.0	25.0	17.0	4.5	8.5	3.2
EFSM-06	6	14.0	25.0	17.0	4.5	8.5	3.2
EFSM-08	8	18.0	33.0	22.0	5.5	10.5	4.3
EFSM-10	10	21.9	38.0	26.0	6.5	12.0	5.3
EFSM-12	12	25.0	40.0	28.0	7.0	13.0	5.3
EFSM-15	15	30.0	49.0	34.0	8.5	15.5	6.4
EFSM-16	16	32.0	52.0	36.0	9.0	16.5	6.4
EFSM-17	17	35.0	54.0	38.0	10.0	18.0	6.4
EFSM-20	20	40.0	65.0	45.0	11.0	20.0	8.4
EFSM-25	25	48.5	74.0	52.0	14.0	25.0	8.4
EFSM-30	30	54.5	85.0	60.0	15.0	26.0	10.5

Standard tolerances:
from 0.5 to 6 mm: ±0.1 mm
over 6 to 30 mm: ±0.2 mm
over 30 to 120 mm: ±0.3 mm

delivery time **from stock**

prices **price list online**
www.igus.co.uk/en/efsm

igubal® Flange Bearings | Product Range

Flange bearing with 4 mounting holes and split housing: KFSM GT

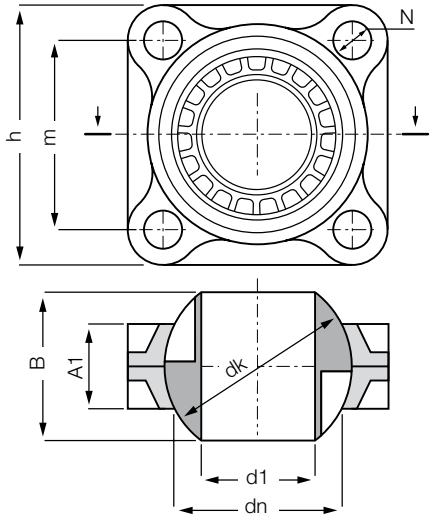

Order key

KFSM GT-35-A

- Option with plug-in feet
- Inner diameter
- Split housing
- Metric
- 4 holes
- Flange bearing
- Dimensional series K

- Preassembled
- Option with plug-in feet
- Resistant to dirt
- Light weight
- Low installation space
- For high static loads
- High tensile strength and fatigue strength
- Predictable lifetime
- Maintenance-free, dry-running
- Mounting: with plug-in feet M10
  without plug-in feet M12

Material:
Housing: **RN33** ▶ **page 1128**
Spherical ball: **iglidur® J** ▶ **page 732**

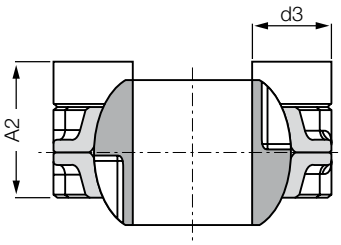

Example: KFSM-GT-40-A

Technical Data

Part number	Maximum static radial load		Maximum static axial load		Weight
	Short term	Long term	Short term	Long term	
	[N]	[N]	[N]	[N]	[g]
KFSM-GT-35*	5,000	2,500	4,500	2,250	183.5
KFSM-GT-40	5,000	2,500	4,500	2,250	161.6
KFSM-GT-45*	6,000	3,000	5,000	2,500	294.6
KFSM-GT-50	6,000	3,000	5,000	2,500	260.1

Max. tightening torque for fixing: 30 Nm

Dimensions [mm]

Part number	d1	dn	d3	dk	A1	A2	B	m	h	N	Max.
	E10										pivot angle
KFSM-GT-35*	35.0	59.0	26.0	66.0	30.0	45.0	48.5	66.0	92.0	13.5	24°
KFSM-GT-40	40.0	59.0	26.0	66.0	30.0	45.0	48.5	66.0	92.0	13.5	24°
KFSM-GT-45*	45.0	72.0	26.0	82.0	40.0	60.0	60.0	78.0	104.0	13.5	24°
KFSM-GT-50	50.0	72.0	26.0	82.0	40.0	60.0	60.0	78.0	104.0	13.5	24°

For KFSM with distance pieces, please add an “A” to the part no. Example: KFSM-GT50-**A.**

* Diameter given by iglidur® J bore reducer

delivery time **from stock**

prices **price list online**
www.igus.co.uk/en/kfsm-gt

igubal® Flange Bearings | Product Range

High-temperature flange bearing with 2 mounting holes: EFOM-HT

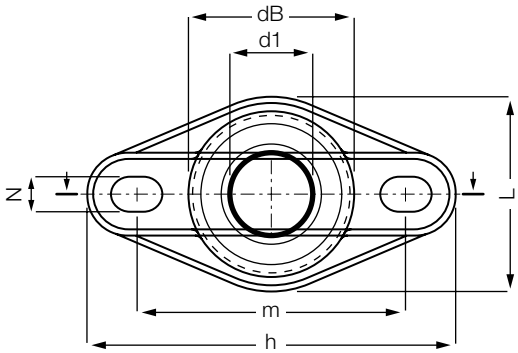

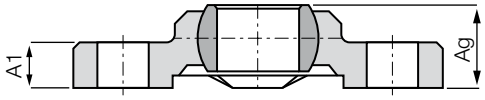

Order key

EFOM-06-HT

- High temperature
- Dimensions
- Metric
- 2 holes
- Flange bearing
- Dimensional series E

Material:
Housing: **iguton G** ▶ **page 1127**
Spherical ball: **iglidur® X** ▶ **page 731**

- For high temperatures up to +200 °C
- Spherical ball made of high temperature resistant iglidur® X
- Easy assembly
- Compensation for alignment errors
- Corrosion-resistance
- Light weight
- Maintenance-free, dry-running
- Chemical resistant (chemical table ▶ **page 1118**)
- Under-water use

Dimensions [mm]

Part number	d1 E10	dB	h Length	L Width	m Hole pitch ±0.1	A1 Height of plate	Ag Total height	N Bore diameter d · l	Max. pivot angle	Weight [g]
EFOM-05-HT	5	14.0	33.8	16.0	24.0	4.5	8.5	3.2 x 5.0	29°	2.5
EFOM-06-HT	6	14.0	33.8	16.0	24.0	4.5	8.5	3.2 x 5.5	27°	2.3
EFOM-08-HT	8	18.0	44.2	22.0	31.0	5.5	10.5	4.3 x 6.5	24°	5.0
EFOM-10-HT	10	22.0	52.0	26.0	36.0	6.5	12.0	5.3 x 8.0	24°	8.3
EFOM-12-HT	12	25.0	56.7	31.0	41.0	7.0	13.0	5.3 x 8.0	21°	10.7

Other dimensions available on request

delivery time from stock

prices price list online
www.igus.co.uk/en/efom-ht

igubal® Flange Bearings | Product Range

High-temperature flange bearing with 4 mounting holes: EFSM-HT

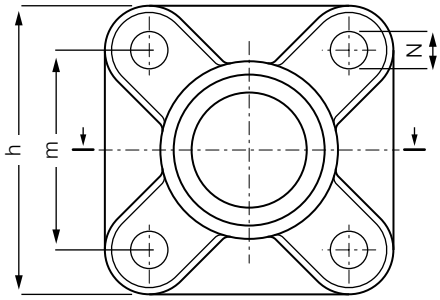

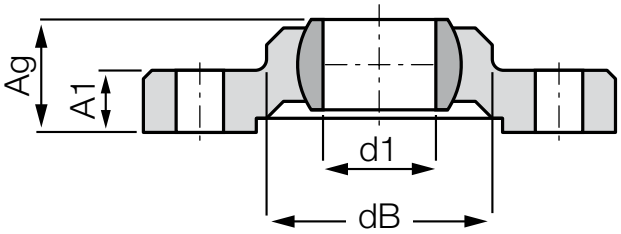

Order key

EFSM-05-HT

- High temperature
- Dimension
- Metric
- 4 holes
- Flange bearing
- Dimensional series E

Material:
Housing: **iguton G** ▶ **page 1127**
Spherical ball: **iglidur® X** ▶ **page 731**

- For high temperatures up to +200 °C
- Spherical ball made of high temperature resistant iglidur® X
- Easy assembly
- Compensation for alignment errors
- Corrosion-resistance
- Light weight
- Maintenance-free, dry-running
- Chemical resistant (chemical table ▶ **page 1118**)
- Under-water use

Dimensions [mm]

Part number	d1 E10	dB	h Width	m Hole pitch ±0.1	A_1 Height of plate	A_g Total height	N Bore diameter d	Max. pivot angle	Weight [g]
EFSM-05-HT	5	14.0	25.0	17.0	4.5	8.5	3.2	29°	3.5
EFSM-06-HT	6	14.0	25.0	17.0	4.5	8.5	3.2	25°	3.3
EFSM-08-HT	8	18.0	33.0	22.0	5.5	10.5	4.3	25°	7.1
EFSM-10-HT	10	22.0	38.0	26.0	6.5	12.0	5.3	25°	11.2
EFSM-12-HT	12	25.0	40.0	28.0	7.0	13.0	5.3	21°	13.3

Other dimensions available on request

delivery time **from stock**

prices **price list online**
www.igus.co.uk/en/efsm-ht

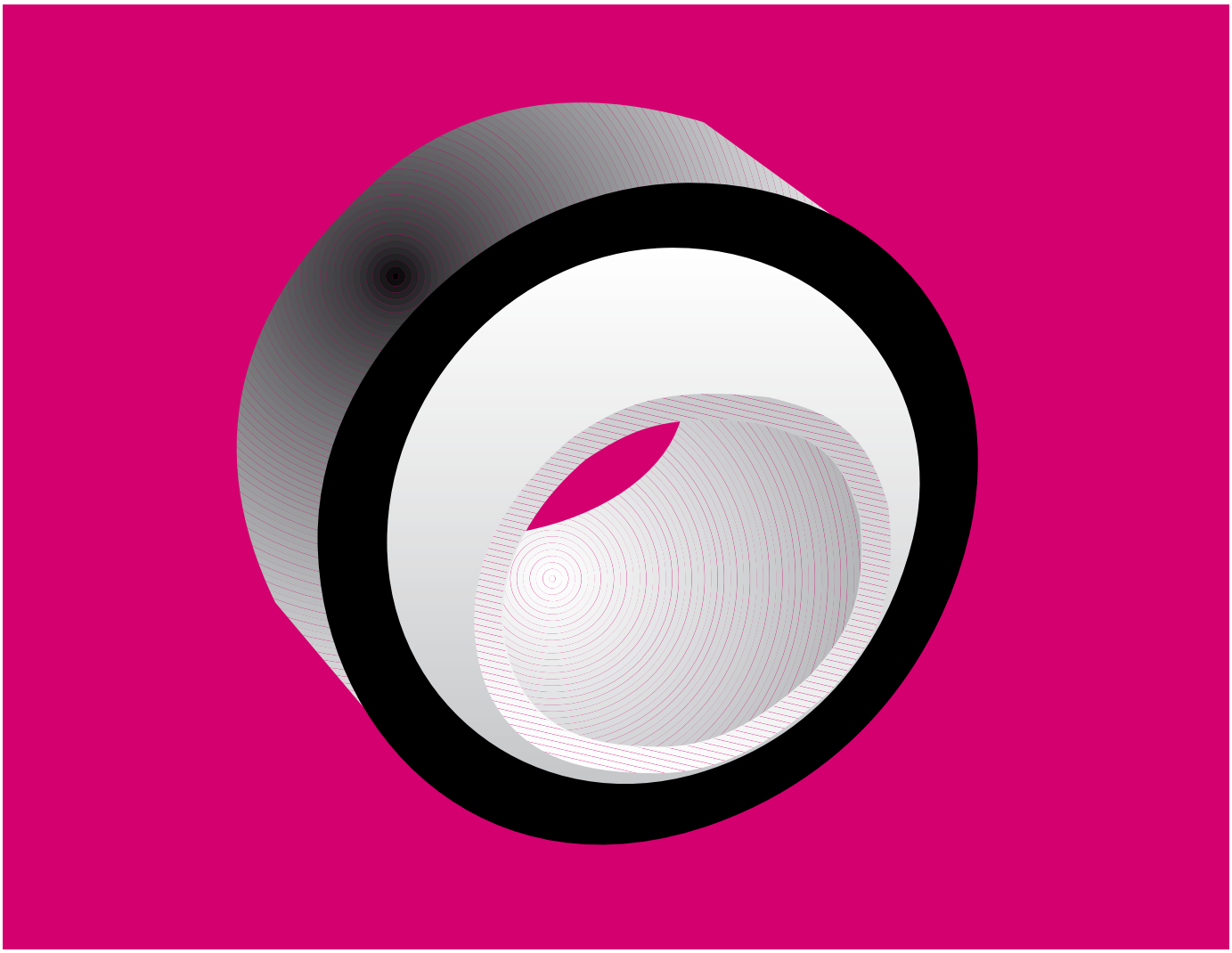

igubal® Pressfit Spherical Bearings

- Easy to fit
- Extremely cost-effective
- Chemical-resistant
- Light weight
- High strength

igubal® Pressfit Spherical Bearings

The use of pivoting bearings is usually associated with high weight materials, difficult installation, and high costs. Most of the time, maintenance is still necessary long term, and the bearings are only corrosion resistant in special designs. igubal® pressfit spherical bearings put an end to all of these disadvantages: they are easy to fit, cost-effective, lightweight and robust.

Easy to fit

Extremely cost-effective

Chemical-resistant

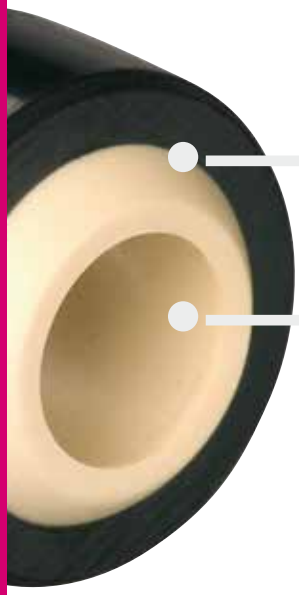

Light weight

High strength

When to use it?

- For high axial and radial loads
- When an easy installation is required
- In case of reduced installation place
- If chemical resistance is required
- If a cost-effective option is requested
- If you need dirt-resistant bearings
- To adjust misalignment

When not to use it?

- If temperatures are higher than +80 °C
- If dimensions above 30 mm are required
- If rotation speeds higher than 0.5 m/s are required

Temperature

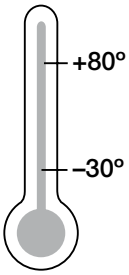

Product range

13 types
Ø 2–30 mm

igubal® Pressfit Spherical Bearings | Application Examples

Typical sectors of industry and application areas

● Food industry ● Railway technology
● Automotive ● Plant design etc.

Improve technology and reduce costs – 110 exciting examples online

▶ www.igus.co.uk/igubal-applications

▶ www.igus.co.uk/food

▶ www.igus.co.uk/traffic

▶ www.igus.co.uk/automotive

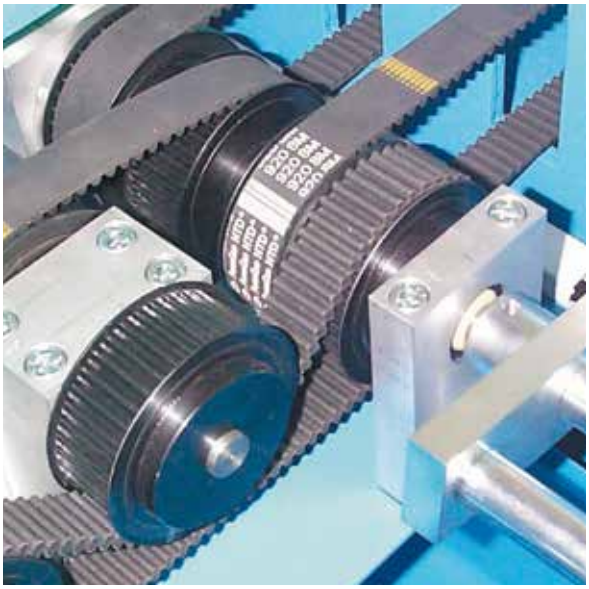

▶ Hose-skiving

igubal® Pressfit Spherical Bearings | Technical Data

The use of spherical bearings is usually associated with high weight materials, difficult installation, and high costs. Most of the time, maintenance is still necessary long term, and the bearings are only corrosion resistant in special designs. Often roller bearings or plain bearings malfunction prematurely due to high edge loads, or because they need to be readjusted, reamed, or refitted in order to compensate for alignment errors.

igubal® spherical bearings put an end to all of these disadvantages and open up many new possibilities for your engineering design.

- igubal® pressfit spherical bearings are easy to fit
- igubal® pressfit spherical bearings are cost-effective
- igubal® pressfit spherical bearings are light weight
- igubal® pressfit spherical bearings have a high strength

Area of application

Ease of installation makes many applications possible for igubal® spherical bearings. They can be used anywhere. The self-aligning feature offers design advantages and helps to simplify assembly.

Tolerances

Maintenance-free igubal® pillow block bearings are designed with an inside diameter tolerance of E10. The shaft should be made to tolerance class h6 to h9. These recommended tolerances allow for changes in the bearing due to temperature.

Installation

igubal® spherical bearings are pressfitted into a recommended H7 housing bore and axially secured. An exact orientation of the bearing housing is not necessary, since the spherical bearing compensates for alignment errors.

Dimensions

igubal® spherical bearings are manufactured according to DIN ISO 12240 dimensional series K and E. The product range provides dimensions from 0.19” to 1.0” and from 2 to 30 mm. Please contact us if you need other dimensions.

Pivot angle

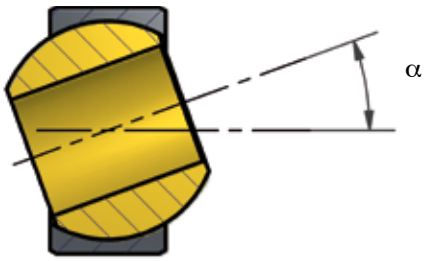

igubal® Pressfit Spherical Bearings | Product Overview

igubal® pressfit spherical bearing

KGLM
Series K
metric

▶ page 706

KGLM LC
Series K
easy to fit,
low-cost

▶ page 707

KGLM SL
Series K
extremely narrow
installation space

▶ page 708

KGLM H
Series K
Soft Touch –
low tolerances

▶ page 709

KGLI
Series K
Inch

▶ page 710

EGLM
Series E
metric

▶ page 711

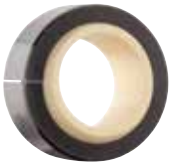

EGLM LC
Series E
low cost

▶ page 712

igubal® self-aligning clip bearing

ECLM
Series E
very easy to fit
by clip-on

▶ page 713

ECLM-HD
Series E
resistant to high radial
and axial loads

▶ page 714

EGFM-...T
Series E
maintenance-free
dry operation

▶ page 715

igubal® double joint

EGZM
Series E
double joint

▶ page 716

WDGM
Variable double spherical
bearings with metallic
middle section

▶ page 718

KDGM
Variable double spherical
bearings with metallic
middle section

▶ page 719

igubal® Pressfit Spherical Bearings | Product Range

Pressfit spherical bearing: KGLM

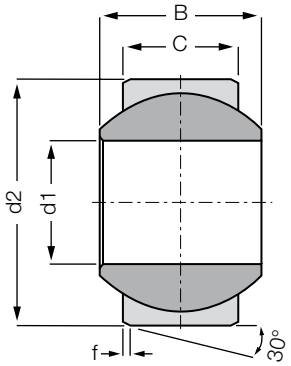

Order key

KGLM-02

- Dimension
- Metric
- Pressfit spherical bearing
- Dimensional series K

- Compensation of misalignment and edge loads
- Corrosion-resistant
- High dampening qualities
- High vibration-dampening capacity
- Suitable for rotating, oscillating and linear movements

Material:
Housing: **igumid G** ▶ **page 1127**
Spherical ball: **iglidur® W300** ▶ **page 729**

Technical Data and Dimensions [mm]

Part number	Max. static compressive strength radial [N]	Max. static compressive strength axial* [N]	Max. torque through ball [Nm]	d1 E10	d2	B	C	f	Max. pivot angle	Weight [g]
KGLM-02	300	60	1	2	8	4	3.0	0.8	32°	0.1
KGLM-03	550	200	2	3	10	6	4.5	0.8	32°	0.5
KGLM-05	1,300	500	5	5	13	8	6.0	0.8	30°	1.0
KGLM-06	1,800	650	10	6	16	9	6.5	0.8	29°	1.6
KGLM-08	2,700	1,200	12	8	19	12	9.0	0.8	25°	2.9
KGLM-10	4,000	1,400	20	10	22	14	10.5	0.8	25°	4.4
KGLM-12	5,400	1,500	30	12	26	16	12.0	0.8	25°	7.0
KGLM-14	6,000	2,500	35	14	28	19	13.5	0.8	23°	9.1
KGLM-16	8,000	3,000	40	16	32	21	15.0	0.8	23°	12.8
KGLM-18	9,000	4,000	45	18	35	23	16.5	0.8	23°	16.6
KGLM-20	10,000	5,000	55	20	40	25	18.0	0.8	23°	24.4
KGLM-22	11,700	6,500	60	22	42	28	20.0	0.8	22°	28.5
KGLM-25	13,600	7,500	65	25	47	31	22.0	0.8	22°	39.3
KGLM-30	20,000	9,000	70	30	55	37	25.0	1.0	22°	62.6

*** The maximum static axial load is determined in a remote location hole.**

delivery time **from stock**

prices **price list online**
www.igus.co.uk/en/kglm

igubal® Pressfit Spherical Bearings | Product Range

Pressfit spherical bearing: KGLM Low Cost

- Variety of ball materials
- Easy to install
- Low-cost
- Split housing

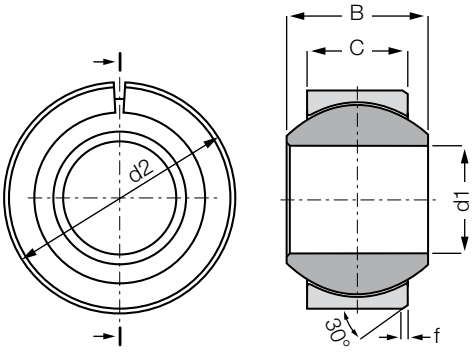

Order key

KGLM-10 LC

- Low Cost
- Dimension
- Metric
- Pressfit spherical bearing
- Dimensional series K

Material:
Housing: **igumid G** ▶ **page 1127**
Spherical balls: **iglidur® W300** ▶ **page 729**
Other spherical balls on request ▶ **page 725**

Technical Data

Part number	Max. static compressive strength (short term) radial [N]	axial [N]	Weight [g]
KGLM-05 LC	1,300	500	1.0
KGLM-10 LC	4,000	1,400	4.3
KGLM-12 LC	5,400	1,500	6.9
KGLM-16 LC	8,000	3,000	12.7
KGLM-20 LC	10,000	5,000	23.6
KGLM-25 LC	13,600	7,500	38.9
KGLM-30 LC	20,000	9,000	61.0

* The maximum static axial load is determined in a remote location hole.

Dimensions [mm]

Part number	d1 E10	d2*	B	C	f	Max. pivot angle
KGLM-05 LC	5	13.0	8	6.0	0.8	30°
KGLM-10 LC	10	22.0	14	10.5	0.8	25°
KGLM-12 LC	12	26.0	16	12	0.8	25°
KGLM-16 LC	16	32.0	21	15	0.8	23°
KGLM-20 LC	20	40.0	25	18	0.8	23°
KGLM-25 LC	25	47.0	31	22	0.8	22°
KGLM-30 LC	30	55.0	37	25	1.0	22°

* pressfitted

delivery time from stock

prices price list online
www.igus.co.uk/en/kglm-lc

Pressfit spherical bearing: KGLM Slim Line

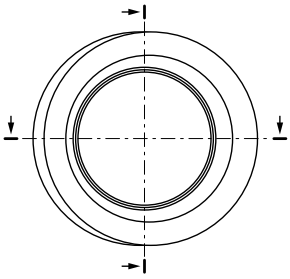

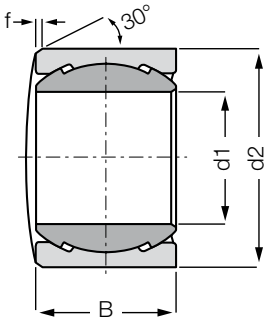

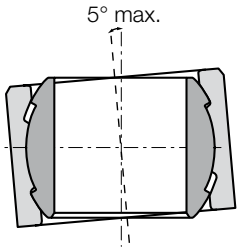

Order key

KGLM-08 SL

- Slim line
- Dimension
- Metric
- Pressfit spherical bearing
- Dimensional series K

Material:
Housing: **igumid G** ▶ **page 1127**
Spherical ball: **iglidur® W300** ▶ **page 729**

- Very small space, wall thickness 50 % thiner than KGLM compared to KGLM
- Angle compensation up to 5 °
- Low weight
- Dimensions according to DIN 1850

Technical Data and Dimensions [mm]

Part number	Max. static compressive strength (short term) radial [N]	Max. static compressive strength (short term) axial [N]	Max. static compressive strength (long term) radial [N]	Max. static compressive strength (long term) axial [N]	d1 E10	d2	B	f	Max. pivot angle	Weight [g]
KGLM-08 SL	2,700	450	1,350	225	8	14	9.0	0.5	5°	1.1
KGLM-10 SL	4,000	750	2,000	375	10	16	10.5	0.5	5°	1.5
KGLM-12 SL	4,500	750	2,250	375	12	18	12.0	0.5	5°	2.0
KGLM-16 SL	6,500	500	3,250	250	16	22	15.0	0.5	5°	3.1

delivery time **from stock**

prices **price list online**
www.igus.co.uk/en/kglm-sl

igubal® Pressfit Spherical Bearings | Product Range

Pressfit spherical bearing: KGLM-H Soft Touch

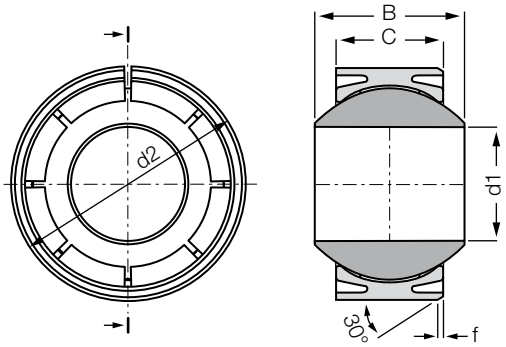

Order key

KGLM-16 H

- Haptics
- Dimension
- Metric
- Pressfit spherical bearing
- Dimensional series K

Material:
Housing: **igumid G** ▶ **page 1127**
Spherical ball: **iglidur® L250** ▶ **page 251**

- Quiet operation
- Low tolerances
- Easy to install
- Chemical- and corrosion-resistant
- Compensation of misalignment errors, precise operation

Technical Data and Dimensions [mm]

Part number	Max. static compressive strength (short term) radial [N]	Max. static compressive strength (short term) axial [N]	Max. static compressive strength (long term) radial [N]	Max. static compressive strength (long term) axial [N]	d1 E10	d2	B	C	f	Max. pivot angle	Weight [g]
KGLM-16-H	4,000	300	2,000	150	16	32	21.0	15	0.8	22°	12.2

delivery time from stock

prices price list online
www.igus.co.uk/en/kglm-h

igubal® Pressfit Spherical Bearings | Product Range

Pressfit spherical bearing: KGLI

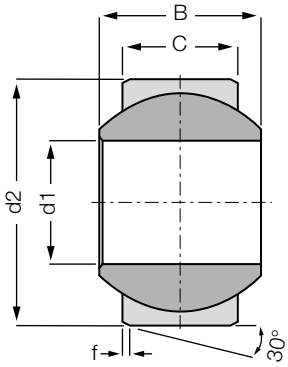

Order key

KGLI-03

- Dimension
- Inch
- Pressfit spherical bearing
- Dimensional series K

- Compensation of misalignment and edge loads
- Corrosion-resistant
- High dampening qualities
- Excellent vibration dampening
- Suitable for rotating, oscillating and linear movements

Material:
Housing: **igumid G** ▶ **page 1127**
Spherical ball: **iglidur® W300** ▶ **page 729**

Technical Data and Dimensions [Inch]

Part number	Max. static compressive strenght radial [N]	Max. static compressive strenght axial* [N]	Max. torque through ball [Nm]	d1 E10	d2	B	C	f	Max. pivot angle	Weight [g]
KGLI-03	1,000	150	5	.1900	.5625	.312	.218	0.3	34°	1.2
KGLI-04	1,500	250	10	.2500	.6562	.375	.250	0.3	30°	1.7
KGLI-05	2,000	350	12	.3125	.7500	.437	.281	0.3	29°	2.6
KGLI-06	2,800	400	20	.3750	.8125	.500	.312	0.5	25°	3.3
KGLI-07	3,750	450	30	.4375	.9375	.562	.343	0.5	25°	4.9
KGLI-08	4,250	500	35	.5000	1.0625	.625	.390	0.5	25°	7.1
KGLI-10	5,300	750	40	.6250	1.1875	.750	.500	0.5	23°	10.2
KGLI-12	8,500	850	55	.7500	1.4375	.875	.593	0.5	23°	17.5
KGLI-16	13,600	2,500	65	1.0000	2.1250	1.375	1.005	0.5	23°	62.7

*** The maximum static axial load is determined in a remote location hole.**

delivery time **from stock**

prices **price list online**
www.igus.co.uk/en/kgli

igubal® Pressfit Spherical Bearings | Product Range

Pressfit spherical bearing: EGLM

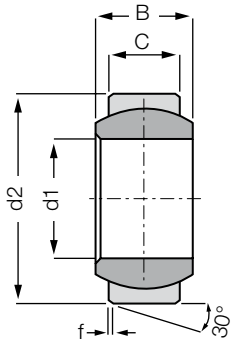

Order key

EGLM-04

- Dimension
- Metric
- Pressfit spherical bearing
- Dimensional series E

- Compensation of misalignment errors and edge loads
- Corrosion-resistant
- High dampening qualities
- Excellent vibration dampening
- Suitable for rotating, oscillating and linear movements

Material:
Housing: **igumid G** ▶ **page 1127**
Spherical ball: **iglidur® W300** ▶ **page 729**

Technical Data and Dimensions [mm]

Part number	Max. static compressive strenght radial [N]	Max. static compressive strenght axial* [N]	Max. torque through ball [Nm]	d1 E10	d2	B	C	f	Max. pivot angle	Weight [g]
EGLM-04	600	50	1	4	12	5	3.0	0.5	37°	0.4
EGLM-05	1,000	130	2	5	14	6	4.0	0.5	33°	0.8
EGLM-06	1,200	150	2.5	6	14	6	4.0	0.5	27°	0.9
EGLM-08	1,800	175	7	8	16	8	5.0	0.5	24°	1.2
EGLM-10	2,500	400	14	10	19	9	6.0	0.5	24°	1.9
EGLM-12	3,800	650	25	12	22	10	7.0	0.5	21°	2.8
EGLM-15	5,500	1,000	30	15	26	12	9.0	0.5	21°	6.9
EGLM-16	6,000	1,150	32	16	28	13	9.5	0.5	21°	9.0
EGLM-17	6,300	1,200	35	17	30	14	10.0	1.0	21°	10.6
EGLM-20	9,000	1,400	40	20	35	16	12.0	1.0	18°	16.3
EGLM-25	14,000	2,900	55	25	42	20	16.0	1.0	16°	29.0
EGLM-30	17,000	4,000	70	30	47	22	18.0	1.0	13°	37.4

*** The maximum static axial load is determined in a remote location hole.**

delivery time **from stock**

prices **price list online**
www.igus.co.uk/en/eglm

Pressfit spherical bearing: EGLM Low Cost

- Easy to install
- Low-cost
- Chemical- and corrosion-resistant
- Very tough
- Compensation of misalignment errors

Order key

EGLM-15-LC

- Low Cost
- Dimension
- metrisc
- Pressfit spherical bearing
- Dimensional series E

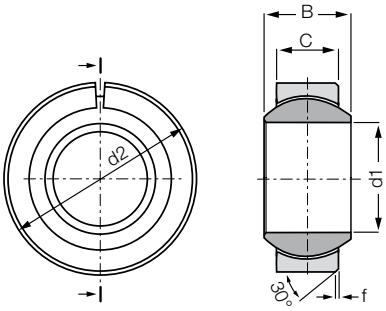

Material:
Housing: **igumid G** ▶ **page 1127**
Spherical ball: **iglidur® W300** ▶ **page 729**
Other spherical balls on request ▶ **page 725**

Technical Data and Dimensions [mm]

Part number	Max. static compressive strenght radial [N]	Max. static compressive strenght axial* [N]	Max. torque through ball [Nm]	d1 E10	d2	B	C	f	Max. pivot angle	Weight [g]
EGLM-15-LC	5,500	1,000	30	15	26	12	9.0	0.5	21°	4.5
EGLM-16-LC	6,000	1,150	32	16	28	13	9.5	0.5	21°	6
EGLM-20-LC	9,000	1,400	40	20	35	16	12	1.0	18°	11
EGLM-25-LC	14,000	2,900	55	25	42	20	16	1.0	16°	20
EGLM-30-LC	17,000	4,000	70	30	47	22	18	1.0	13°	26

*** The maximum static axial load is determined in a remote location hole.**

delivery time **from stock**

prices **price list online**
www.igus.co.uk/en/eglm-lc

igubal® Self-aligning Clip Bearing | Product Range

Self-aligning clip bearing: ECLM

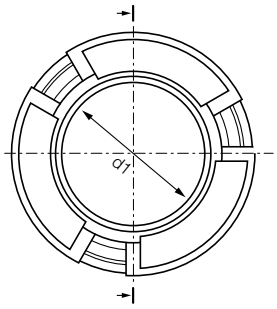

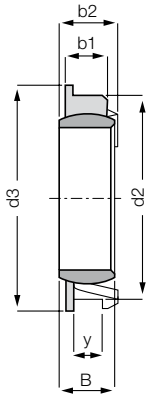

Order key

ECLM-05-02

- Sheet thickness
- Dimension
- Metric
- Self-aligning clip bearing
- Dimensional series E

- Very easy installation by simply snapping into sheet metal
- No additional axial fastening necessary
- Extremely small installation space: space-saving, thin-walled design

Material:
Housing: **igumid G** ▶ **page 1127**
Spherical ball: **iglidur® J** ▶ **page 732**

Technical Data

Part number	Max. static compressive strength (short term) radial [N]	Max. static compressive strength (short term) axial [N]	Max. static compressive strength (long term) radial [N]	Max. static compressive strength (long term) axial [N]	Weight [g]
ECLM-05-02	700	25	350	12.5	0.5
ECLM-06-02	700	25	350	12.5	0.5
ECLM-08-02	1,000	25	500	12.5	0.5
ECLM-10-03	1,400	30	700	15.0	0.8
ECLM-12-03	1,800	20	900	10.0	0.8
ECLM-16-03	2,800	40	1,400	20.0	1.1

Dimensions [mm]

Part number	d1 E10	B	d2 ±0.2	d3	y	b1 ±0.1	b2	Max. pivot angle
ECLM-05-02	5	6.0	12	13	2.0	3.9	6.0	25°
ECLM-06-02	6	6.0	12	13	2.0	3.9	6.0	18°
ECLM-08-02	8	6.0	14	15	2.0	3.9	6.0	16°
ECLM-10-03	10	6.0	16	17	3.0	4.5	6.7	12°
ECLM-12-03	12	6.0	18	19	3.0	4.5	6.7	12°
ECLM-16-03	16	6.0	22	24	3.0	4.5	6.7	12°

delivery time from stock

prices price list online
www.igus.co.uk/en/eclm

igubal® Self-aligning Clip Bearing | Product Range

Self-aligning clip bearing: ECLM-HD

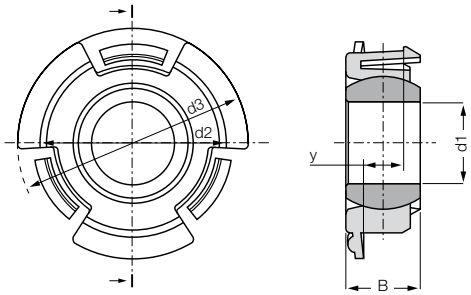

Order key

ECLM-10-05-HD

- Heavy Duty
- Sheet thickness
- Dimension
- Metric
- Self-aligning clip bearing
- Dimensional series E

Material:
Housing: **igumid G** ▶ **page 1127**
Spherical balls: **iglidur® W300** ▶ **page 729**
Other spherical balls on request ▶ **page 725**

- High axial and radial loads
- Adjustment of axial and radial clearance by preloading
- Easily clips into sheet metal
- No additional axial fastening necessary
- For sheet thickness 4 to 8 mm

Technical Data

Part number		Max. static compressive strength (short term) radial [N]	Max. static compressive strength (short term) axial [N]	Max. static compressive strength (long term) radial [N]	Max. static compressive strength (long term) axial [N]	Weight [g]
ECLM-08-04-HD	New!*	1,750	125	875	60	2.0
ECLM-10-05-HD		2,500	150	1,250	75	3.1
ECLM-12-06-HD	New!*	3,500	175	1,750	85	3.8
ECLM-20-08-HD	New!*	6,000	330	3,000	165	12.0

Dimensions [mm]

Part number		d1 E10	B	d2 ±0.15	d3	y ±0.1	Max. pivot angle
ECLM-08-04-HD	New!*	8.0	8.0	18.0	25	4.0	28°
ECLM-10-05-HD		10.0	9.0	22.0	28	5.0	24°
ECLM-12-06-HD	New!*	12.0	10.0	24.0	32	6.0	24°
ECLM-20-08-HD	New!*	20.0	16.0	36.0	44	8.0	21°

* in this catalog

Spherical bearing materials to choose ▶ page 725


REM: low-cost


JEM: low moisture absorption


J4EM: low-cost and low moisture absorption


J4VEM: clearance-free preloaded spherical ball

delivery time **from stock**

prices **price list online**
www.igus.co.uk/en/eclm-hd

igubal® Self-aligning Clip Bearing | Product Range

Self-aligning clip bearing: EGFM-T

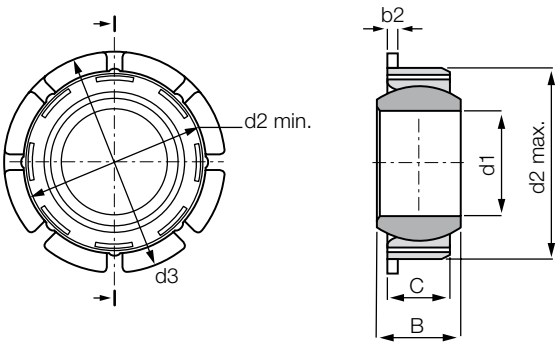

- Maintenance-free, dry-running
- Easy to fit
- Max. tolerance compensation ±0.2 mm

Order key

EGFM-08 T

- Tolerance compensation
- Inner diameter d1
- Metric
- Self-aligning bearing with flange
- Dimensional series E

Material:
Housing: **igumid G** ▶ **page 1127**
Spherical balls: **iglidur® W300** ▶ **page 729**
Other spherical balls on request ▶ **page 725**

Technical Data

Part number	Max. stat. compressive force (short term) radial [N]	Max. stat. compressive force (short term) axial [N]	Max. stat. compressive force (long term) radial [N]	Max. stat. compressive force (long term) axial [N]	Weight [g]
EGFM-08 T SL*	1,100	150	550	75	0.9
EGFM-10 T	1,900	220	950	110	2.4
EGFM-12 T	2,500	270	1,250	135	3.0
EGFM-16 T	6,000	600	3,000	300	6.6
EGFM-20 T	9,000	800	4,500	400	11.1
EGFM-25 T	14,000	2,800	7,000	1,400	19.0
EGFM-30 T	17,000	3,000	8,500	1,500	24.0

Dimensions [mm]

Part number	d1	d2 min.	d2 max.	d3	C	B	b2	Housing min.	Housing max.	Max. pivot angle
EGFM-08 T SL*	8 (H10)	15.8	16.5	18	5.0	6	1.1	15.8	16.2	11°
EGFM-10 T	10 (E10)	20.8	21.6	26	6.0	9	1.0	20.8	21.2	24°
EGFM-12 T	12 (E10)	22.8	23.6	28	7.0	10	1.0	22.8	23.2	21°
EGFM-16 T	16 (E10)	29.8	30.6	35	9.5	13	1.5	29.8	30.2	21°
EGFM-20 T	20 (E10)	34.8	35.6	42	12.0	16	2.0	34.8	35.2	18°
EGFM-25 T	25 (E10)	41.8	42.6	50	16.0	20	2.0	41.8	42.2	16°
EGFM-30 T	30 (E10)	46.8	47.6	55	18.0	22	2.0	46.8	47.2	13°

* Spherical ball made of iglidur® J

delivery time from stock

prices price list online
www.igus.co.uk/en/egfm-t

igubal® Double Joint | Product Range

Double joint: EGZM

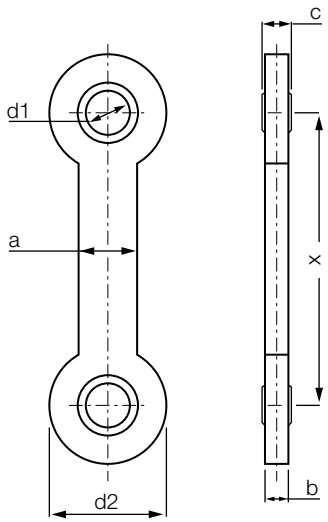

Order key

EGZM-04-25

- Pitch X
- Inner diameter d1
- Metric
- Double joint
- Dimensional series E

- Maintenance-free, self-lubricating
- Mechanical joining link between 2 components
- Compensation of misalignment errors
- Corrosion-resistant
- Double joint turned 90° available on request

Material:
Housing: **igumid G** ▶ **page 1127**
Spherical ball: **iglidur® W300** ▶ **page 729**
Other spherical balls on request ▶ **page 725**

Technical Data and Dimensions [mm]

Part number	Max. static tensile strength (short term) radial [N]	Max. static tensile strength (short term) axial [N]	Max. static tensile strength (long term) radial [N]	Max. static tensile strength (long term) axial [N]	d1 E10	d2	X	b	a	c	Max. pivot angle	Weight [g]
EGZM-04-25	1,100	1,300	550	650	04	20	25	4	10	5	32°	3.5
EGZM-04-50	1,100	750	550	375	04	20	50	4	10	5	32°	4.8
EGZM-04-75	1,100	500	550	250	04	20	75	4	10	5	32°	6.1
EGZM-05-25	1,100	1,300	550	650	05	20	25	4	10	6	37°	2.2
EGZM-05-50	1,100	750	550	375	05	20	50	4	10	6	37°	4.9
EGZM-05-75	1,100	500	550	250	05	20	75	4	10	6	37°	6.3
EGZM-06-25	1,100	1,300	550	650	06	20	25	4	10	6	30°	3.4
EGZM-06-50	1,100	750	550	375	06	20	50	4	10	6	30°	4.8
EGZM-06-75	1,100	500	550	250	06	20	75	4	10	6	30°	3.4
EGZM-08-60	3,000	3,500	1,500	1,750	08	30	60	7	15	8	20°	15.2
EGZM-08-100	3,000	1,900	1,500	950	08	30	100	7	15	8	20°	19.5
EGZM-10-60	2,500	3,500	1,250	1,750	10	30	60	7	15	9	25°	15.3
EGZM-10-85	2,500	2,300	1,250	1,150	10	30	85	7	15	9	25°	18.1
EGZM-10-100	2,500	1,900	1,250	950	10	30	100	7	15	9	25°	19.4
EGZM-12-60	2,000	3,500	1,000	1,750	12	30	60	7	15	10	25°	14.7
EGZM-12-100	2,500	1,900	1,000	950	12	30	100	7	15	10	25°	18.8

Spherical bearing materials to choose ▶ page 725


REM: low-cost


JEM: low moisture absorption


J4VEM: clearance-free preloaded spherical ball


J4EM: low-cost and low moisture absorption

delivery time **from stock**

prices **price list online**
www.igus.co.uk/en/egzm

My Sketches

igubal® Double Joint | Product Range

Variable double joint: WDGM

Version A Version B Version C Version D

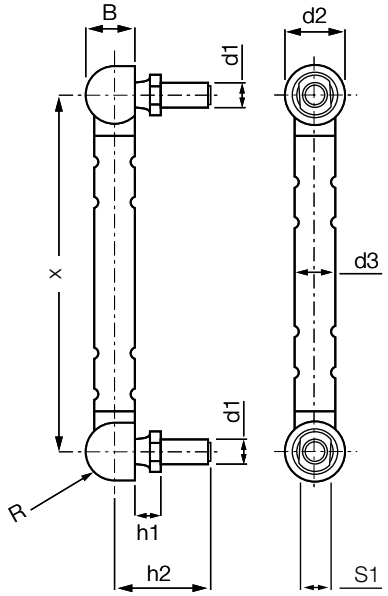

Order key

WDGM-05-A-SR-SZ

- Ball stud material
  - SZ = Steel
  - EZ = Stainless steel
  - PZ = igumid G
- Tube material
  - SR = Steel
  - ER = Stainless steel
- Ball stud direction (A, B, C or D)
- Ball stud thread
- Metric
- Double joint
- Angle

Material:
Housing: **igumid G** ▶ **page 1127**
Spherical ball: **igumid G, steel or stainless steel**
Ball stud: **galvanized or stainless steel**

- Socket cup M5, M6, M8 and M10
- Individual centre dimensions and lengths
- Individual alignment of the bearing position

Dimensions [mm]

Part number	d1	d2	d3	X min.	B	h1	h2	S1 Width across flats	R	Max. pivot angle
WDGM-05-A-SR-SZ ☐*	M5	12.8	8.0	74.0	10.8	4.6	19.2	SW8	6.4	23°
WDGM-06-A-SR-SZ ☐*	M6	14.8	10.0	80.0	12.3	6.1	23.5	SW9	7.4	25°
WDGM-08-A-SR-SZ ☐*	M8	19.3	12.0	80.0	16.2	5.9	29.5	SW12	9.7	24°
WDGM-10-A-SR-SZ ☐*	M10	24.0	14.0	90.0	20.0	7.9	36.0	SW14	12.0	25°

* Please add the required centre distance in mm.
Order example, WDGM-05-A-SR-SZ, 100 : Double joint with 05 ball stud thread, version A, tube material made of steel, ball stud made of steel, centre distance 100mm

delivery time from stock

prices price list online
www.igus.co.uk/en/wdgm-xx

igubal® Double Joint | Product Range

Variable double joint: KDGM

Version A Version B

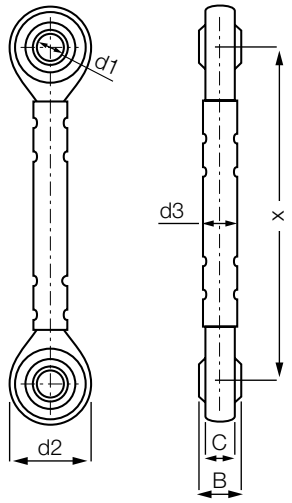

Order key

KDGM-06-A-SR-J

- Spherical ball material
  - Blank = iglidur® W300
  - J = iglidur® J
  - J4 = iglidur® J4
  - R = iglidur® R
  - EK = Stainless steel
- Tube material
  - SR = Steel
  - ER = Stainless steel
- Ball stud direction (A or B)
- Inner diameter
- Metric
- Double spherical joint
- Dimensional series K

Material:
Housing: **igumid G ▶ page 1127**
Ball: **variable ▶ page 725**
Ball stud: **galvanized or stainless steel**

- Ball diameters 6, 8, 10 and 12 mm
- Individual centre dimensions and lengths
- Individual alignment of the bearing position

Dimensions [mm]

Part number	d1	d2	d3	X	B	C	Max. pivot angle
	E 10			min.			
KDGM-06-A-SR-J ☐ *	6.0	20.0	6.0	72.0	9.0	7.0	40°
KDGM-08-A-SR-J ☐ *	8.0	24.0	8.0	84.0	12.0	9.0	35°
KDGM-10-A-SR-J ☐ *	10.0	30.0	10.0	96.0	14.0	10.5	35°
KDGM-12-A-SR-J ☐ *	12.0	34.0	12.0	108.0	16.0	12.0	35°

* Please add the required centre distance in mm.
Order example, KDGM-06-A-SR-J, 100 : Double joint with 06 mm inner diameter, version A, tube material made of steel, spherical ball made of iglidur® J, centre distance 100mm

delivery time from stock

prices price list online
www.igus.co.uk/en/kdgm-xx

My Sketches

igubal® Spherical Thrust Bearings

- Easy to install
- Compensation of misalignment errors
- Compensation of edge loads
- Very good friction and wear properties

igubal® – Spherical Thrust Bearing

igubal® self-aligning spherical thrust bearings are very easy to fit and help to compensate misalignment errors and prevent edge loads.

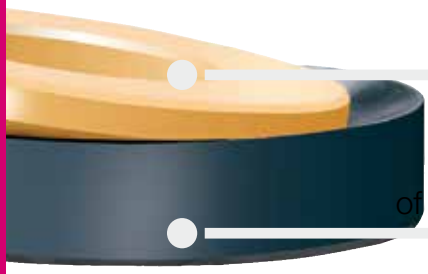

Easy to install

Compensation of misalignment errors

Prevent edge loads

Very good friction and wear properties

When to use it?

- If you want to save weight
- If corrosion resistance is requested
- If a bearing with a good coefficient of friction is sought

When not to use it?

- At very high loads
- If temperatures are higher than +80 °C
- If a high number of revolutions have to be achieved

Temperature

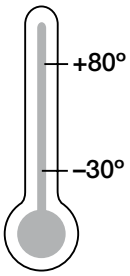

Product range

1 type
Ø 5–20 mm

igubal® Spherical Thrust Bearing | Technical Data

Mechanical Properties

igubal® self-aligning spherical thrust bearings are very easy to fit and help to compensate for alignment errors and prevent edge loads.The housing pad is made of the impact resistant, thermoplastic composite material igumid G. The spherical washer is made of the iglidur® W300 plain bearing material. This combination provides exceptionally good friction and wear properties.

Loads

The load capacity of igubal® spherical thrust bearings is very high for standard ambient temperatures. For high continuous loads and high temperatures, the load capacity of the thrust bearings should be tested in an experiment that simulates the application.

Coefficients of Friction and Speed

Taking into account the radial load, maximum surface speeds up to 0.5 m/s rotating are possible.

Installation

The housing pad is installed so that it is countersunk and secured. The spherical washer is loosely fitted in the socket and is held in place by the shaft that is placed into the bearing.

Product Range

igubal® spherical thrust bearings are available in standard form to suit diameters from 5 to 20 mm. Please contact us if you require other dimensions.

igubal® Spherical Thrust Bearing | Product Range

Spherical thrust bearing: SAM

Order key

SAM-05

- Inner-Ø d1
- Metric
- Type

Spherical washer

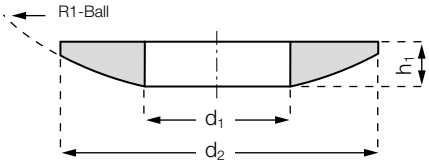

Housing pad

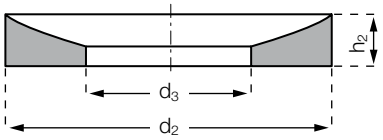

Material:
Spherical washer: **iglidur® W300** ▶ **page 135**
Housing pad: **igumid G** ▶ **page 1127**

Technical Data

Part number	Maximum static axial tensile strength short term [N]	Maximum static axial tensile strength long term [N]	Weight [g]
SAM-05	4,000	2,000	0.9
SAM-06	5,000	2,500	1.1
SAM-08	8,000	4,000	2.2
SAM-10	10,000	5,000	3.4
SAM-12	12,000	6,000	5.9
SAM-16	17,000	8,500	8.5
SAM-20	22,000	11,000	12.8

Dimensions [mm]

Part number	d1 spherical washer DIN 7168	d3 housing pad DIN 7168	d2	h1 spherical washer	h2 housing pad	H total height	R1 radius	Compensation angle
SAM-05	5.2	7.0	15.0	3.0	3.5	4.7	15.0	3°
SAM-06	6.2	7.5	16.0	3.0	4.0	5.3	16.0	3°
SAM-08	8.2	10.0	20.0	4.0	5.0	6.8	20.0	2°
SAM-10	10.2	12.0	24.0	4.5	5.5	7.5	24.0	2°
SAM-12	12.5	14.5	30.0	5.0	6.2	8.0	32.0	2°
SAM-16	16.5	19.0	36.0	5.5	6.5	8.7	40.0	2°
SAM-20	20.2	23.0	44.0	6.0	7.0	8.6	45.0	2°

* in assembled condition

delivery time from stock

prices price list online
www.igus.co.uk/en/sam

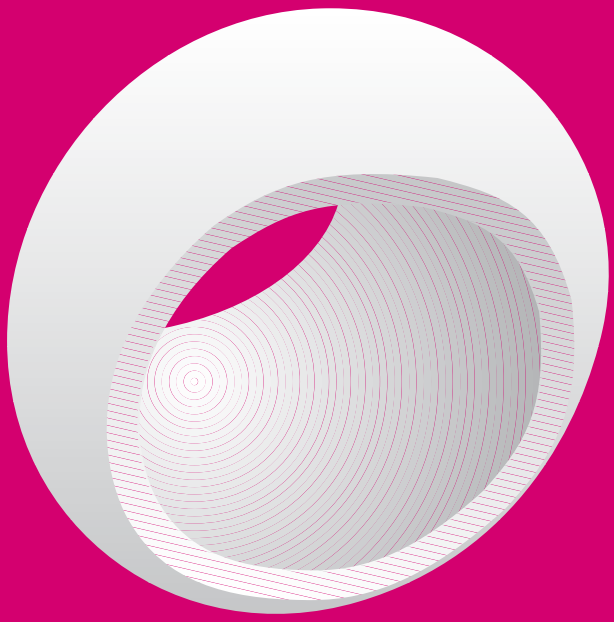

igubal® Spherical Balls

- Maintenance-free, self-lubricating
- Corrosion-resistant
- High compressive strength
- High elasticity
- Light weight
- Different materials

igubal® Spherical Balls

Every single iglidur® material has its own special properties, which determines the suitability for your special applications and requirements. Today, we offer you spherical bearings from iglidur® materials W300 (standard), J, J4, R, RN248, UW and X.

Maintenance-free, self-lubricating

Corrosion-resistant

High compressive strength

High elasticity

Light weight

Different materials

When to use it?

- If you need maintenance-free material
- When dimensional series E and K components should be fitted
- If different iglidur® materials should be tested
- If high compressive strength is required
- If high elasticity is required

When not to use it?

- If temperatures are higher than +250 °C
- If dimensions above 50 mm are necessary
- If rotation speeds higher than 0.5 m/s are required

Temperature	Product Range	Tolerances
Depend on material	6 types Ø 2–50 mm	The tolerance of the inner diameter is E10. The shaft tolerance should be included between h6 and h9.

igubal® Spherical Balls | Application Examples

Typical sectors of industry and application areas

- Plant design
- Model building
- Furniture/Industrial design etc.

Improve technology and reduce costs – 110 exciting examples online

▶ **www.igus.co.uk/igubal-applications**

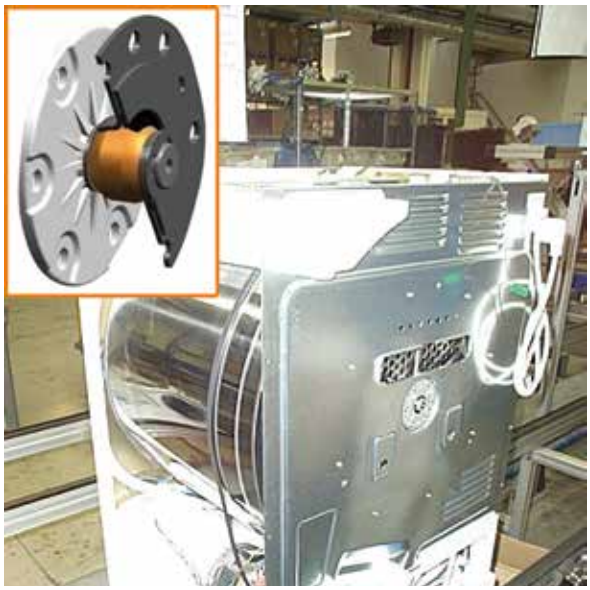

Drum bearing in a tumble dryer

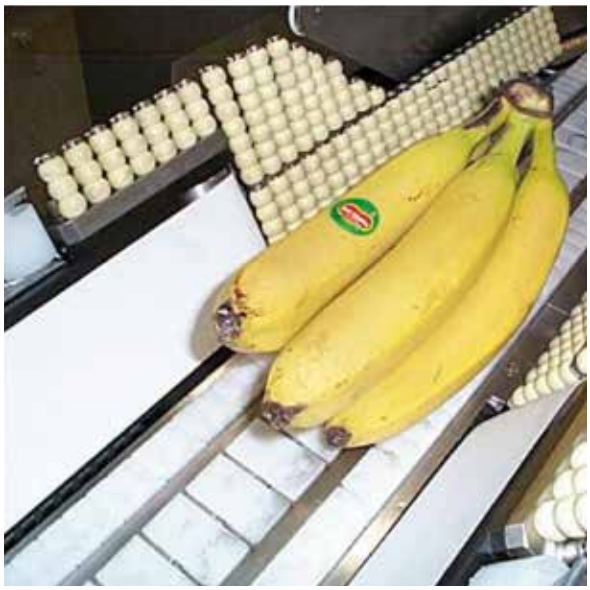

▶ www.igus.co.uk/food

Carriage in a crane system

▶ www.igus.co.uk/industrial-design

igubal® Spherical Balls | Product Overview

standard – igubal® spherical balls

iglidur® W300 (material information ▶ page 135)

WKM/WKI
Series K
metric/Inch
▶ page 729

WEM/WEI
Series E
metric/Inch
▶ page 729

low-cost – igubal® spherical balls

iglidur® R (material information ▶ page 261)

RKM
Series K
metric
▶ page 730

REM
Series E
metric
▶ page 730

high temperatures – igubal® spherical balls

iglidur® X (material information ▶ page 157)

XKM
Series K
metric
▶ page 731

XEM
Series E
metric
▶ page 731

low moisture absorption – igubal® spherical balls

iglidur® J (material information ▶ page 93)

JKM
Series K
metric
▶ page 732

JEM
Series E
metric
▶ page 732

cost-effective – igubal® spherical balls

iglidur® J4 (material information ▶ page 1126)

J4KM
Series K
metric
▶ page 733

J4EM
Series E
metric
▶ page 733

under water applications – igubal® spherical balls

iglidur® UW (material information ▶ page 509)

UWEM
Series E
metric
▶ page 734

clearance free – igubal® spherical balls

iglidur® J4VEM (material information ▶ page 1126)

J4VEM
Series E
metric
▶ page 735

detectable – igubal® spherical balls

iglidur® RN248 (material information ▶ page 1129)

RN248KM
Series K
metric
▶ page 736

RN248EM
Series E
metric
▶ page 736

igubal® Spherical Balls | Product Range

Standard spherical balls: WKM and WKI/WEM and WEI

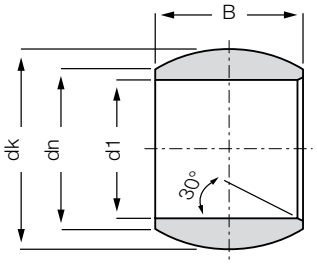

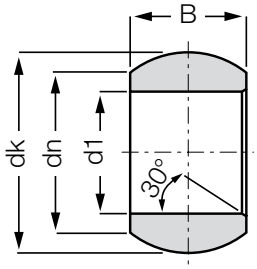

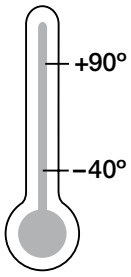

Order key

W...M-02-04

- Width B
- Inner diameter d1
- Measuring system
  - M = Metric
  - I = Inch
- Dimensonal series
  - K = Series K
  - E = Series E
- Spherical balls made of iglidur® W300

Dimensions [mm]

Part number	d1 E10	dn	dK	B	Weight [g]
WKM-02-04	2.00	3.90	5.10	4.00	0.1
WKM-03-06	3.00	5.10	8.10	6.00	0.3
WKM-05-08	5.00	7.70	11.30	8.00	0.6
WKM-06-09	6.00	8.90	12.80	9.00	0.9
WKM-08-12	8.00	10.30	16.00	12.00	1.6
WKM-10-14	10.00	12.90	19.00	14.00	2.7
WKM-12-16	12.00	15.40	22.10	16.00	4.0
WKM-14-19	14.00	16.80	25.40	19.00	6.0
WKM-16-21	16.00	19.30	28.40	21.00	8.2
WKM-18-23	18.00	21.80	31.50	23.00	10.8
WKM-20-25	20.00	24.30	35.10	25.00	14.5
WKM-22-28	22.00	25.80	38.30	28.00	18.7
WKM-25-31	25.00	29.50	42.90	31.00	26.0
WKM-30-37	30.00	34.80	51.20	37.00	44.7

Dimensions [Inch]

Part number	d1 E10	dn	dK	B	Weight [g]
WKI-03	.1900	.307	.444	.312	0.6
WKI-04	.2500	.354	.516	.375	1.0
WKI-05	.3125	.447	.625	.437	1.7
WKI-06	.3750	.504	.718	.500	2.3
WKI-07	.4375	.601	.828	.562	3.5
WKI-08	.5000	.700	.938	.625	5.0
WKI-10	.6250	.838	1.125	.750	8.2
WKI-12	.7500	.978	1.312	.875	12.5
WKI-16	1.0000	1.269	1.750	1.375	31.7

Dimensions [mm]

Part number	d1 E10	dn	dK	B	Weight [g]
WEM-04-05	4.00	6.25	8.30	5.00	0.2
WEM-05-06	5.00	8.00	10.30	6.00	0.3
WEM-06-06	6.00	8.00	10.30	6.00	0.4
WEM-08-08	8.00	10.00	13.30	8.00	0.7
WEM-10-09	10.00	13.00	16.10	9.00	1.2
WEM-12-10	12.00	15.00	18.10	10.00	1.5
WEM-15-12	15.00	18.00	22.00	12.00	2.4
WEM-16-13	16.00	19.50	24.10	13.00	3.3
WEM-17-14	17.00	20.00	25.10	14.00	3.7
WEM-20-16	20.00	24.00	29.10	16.00	5.3
WEM-25-20	25.00	29.00	35.60	20.00	9.5
WEM-30-22	30.00	34.00	40.90	22.00	12.1

Dimensions [Inch]

Part number	d1 E10	dn	dK	B	Weight [g]
WEI-03	.1900	.354	.402	.1900	0.3
WEI-04	.2500	.314	.402	.2500	0.3
WEI-05	.3125	.415	.520	.3125	0.7
WEI-06	.3750	.506	.630	.3750	1.3
WEI-07	.4375	.581	.709	.4063	1.6
WEI-08	.5000	.581	.709	.4063	2.6
WEI-10	.6250	.802	.945	.5000	3.1
WEI-12	.7500	.951	1.138	.6250	5.9
WEI-16	1.0000	1.180	1.398	.7500	9.2

igubal® Spherical Balls | Product Range

Low-cost spherical balls: RKM and REM

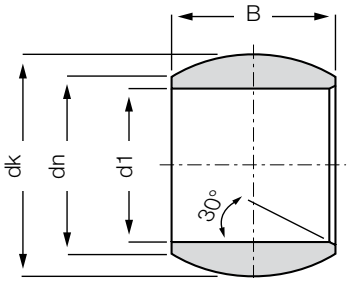

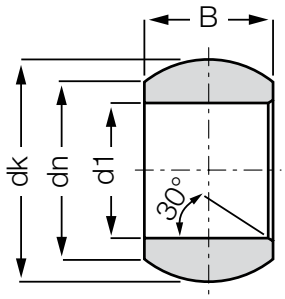

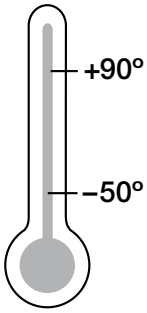

Order key

R...M-10-14

- Width B
- Inner diameter d1
- Metric
- Dimensional series
- K = Series K
- E = Series E
- Spherical balls made of iglidur® R

Dimensions [mm]

Part number	d1 E10	dn	dK	B	Weight [g]
RKM-10-14	10.00	12.90	19.00	14.00	2.9

Dimensions [mm]

Part number	d1 E10	dn	dK	B	Weight [g]
REM-05-06	5.00	8.00	10.20	6.00	0.4
REM-06-06	6.00	8.00	10.20	6.00	0.4
REM-08-08	8.00	10.00	13.20	8.00	0.8
REM-10-09	10.00	13.00	16.10	9.00	1.3
REM-12-10	12.00	15.00	18.10	10.00	1.6

delivery time from stock

prices price list online
www.igus.co.uk/en/rkm

igubal® Spherical Balls | Product Range

High temperatures spherical balls: XKM and XEM

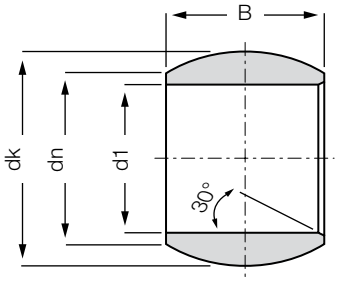

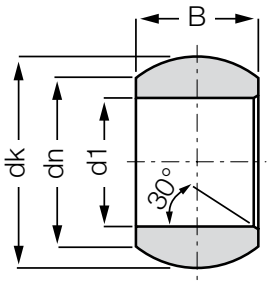

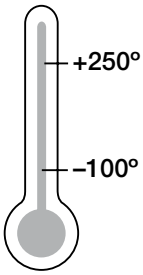

Order key

X...M-10-14

- Width B
- Inner diameter d1
- Metric
- Dimensional series
- K = Series K
- E = Series E
- Spherical balls made of iglidur® X

Dimensions [mm]

Part number	d1 E10	dn	dK	B	Weight [g]
XKM-10-14	10.00	12.90	19.10	14.00	2.9

Dimensions [mm]

Part number	d1 E10	dn	dK	B	Weight [g]
XEM-05-06	5.00	8.00	10.30	6.00	0.4
XEM-06-06	6.00	8.00	10.20	6.00	0.4
XEM-08-08	8.00	10.00	13.30	8.00	0.8
XEM-10-09	10.00	13.00	16.10	9.00	1.3
XEM-12-10	12.00	15.00	18.10	10.00	1.6

delivery time from stock

prices price list online
www.igus.co.uk/en/xkm

igubal® Spherical Balls | Product Range

Low moisture absorption spherical balls: JKM and JEM

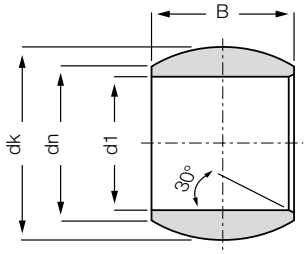

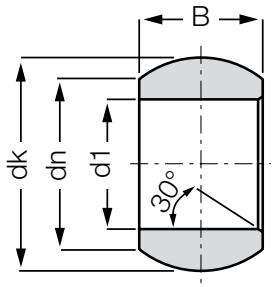

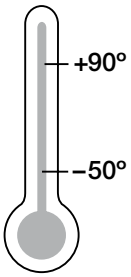

Order key

J...M-03-06

- Width B
- Inner diameter d1
- Metric
- Dimensional series
  - K = Series K
  - E = Series E
- Spherical balls made of iglidur® J

Dimensions [mm]

Part number	d1 E10	dn	dK	B	Weight [g]
JKM-03-06	3.00	5.10	8.10	6.00	0.3
JKM-05-08	5.00	7.70	11.30	8.00	0.7
JKM-06-09	6.00	8.90	12.80	9.00	1.0
JKM-08-12	8.00	10.30	15.90	12.00	1.9
JKM-10-14	10.00	12.90	19.00	14.00	3.1
JKM-12-16	12.00	15.40	22.10	16.00	4.7
JKM-16-21	16.00	19.30	28.40	21.00	9.4
JKM-20-25	20.00	24.30	35.10	25.00	17.6
JKM-25-31	25.00	29.50	42.80	31.00	31.6
JKM-30-37	30.00	34.80	51.20	37.00	53.0
JKM-40-49	40.00	44.50	66.30	49.00	54.5
JKM-50-60	50.00	56.50	82.40	60.00	92.1

Dimensions [mm]

Part number	d1 E10	dn	dK	B	Weight [g]
JEM-04-05	4.00	6.25	8.30	5.00	0.3
JEM-05-06	5.00	8.00	10.20	6.00	0.4
JEM-06-06	6.00	8.00	10.20	6.00	0.4
JEM-08-08	8.00	10.00	13.30	8.00	0.8
JEM-10-09	10.00	13.00	16.10	9.00	1.3
JEM-12-10	12.00	15.00	18.10	10.00	1.7
JEM-15-12	15.00	18.00	22.00	12.00	2.9
JEM-16-13	16.00	19.50	24.10	13.00	3.9
JEM-17-14	17.00	20.00	25.20	14.00	4.1
JEM-20-16	20.00	24.00	29.10	16.00	6.4
JEM-25-20	25.00	29.00	35.60	20.00	11.5
JEM-30-22	30.00	34.00	40.90	22.00	14.5

igubal® Spherical Balls | Product Range

Cost-effective spherical balls: J4KM and J4EM

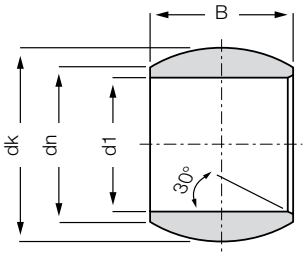

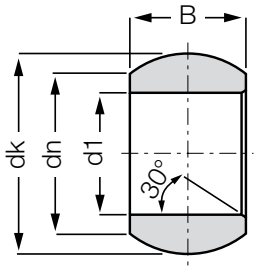

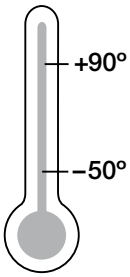

Order key

J4...M-10-14

- Width B
- Inner diameter d1
- Metric
- Dimensional series
  - K = Series K
  - E = Series E
- Spherical balls made of iglidur® J4

Dimensions [mm]

Part number	d1 E10	dn	dK	B	Weight [g]
J4KM-10-14	10.00	12.90	19.10	14.00	3.1

Dimensions [mm]

Part number	d1 E10	dn	dK	B	Weight [g]
J4EM-04-05	4.00	6.25	8.25	5.00	0.3
J4EM-05-06	5.00	8.00	10.20	6.00	0.4
J4EM-06-06	6.00	8.00	10.20	6.00	0.4
J4EM-08-08	8.00	10.00	13.30	8.00	0.8
J4EM-10-09	10.00	13.00	16.00	9.00	1.3
J4EM-12-10	12.00	15.00	18.00	10.00	1.7
J4EM-15-12	15.00	18.00	22.00	12.00	2.9
J4EM-16-13	16.00	19.50	24.00	13.00	3.9
J4EM-17-14	17.00	20.00	25.10	14.00	4.1
J4EM-20-16	20.00	24.00	28.90	16.00	6.4
J4EM-25-20	25.00	29.00	35.50	20.00	11.5
J4EM-30-22	30.00	34.00	40.90	22.00	14.5

delivery time from stock

prices price list online
www.igus.co.uk/en/j4km

igubal® Spherical Balls | Product Range

Spherical balls for under water applications: UWEM

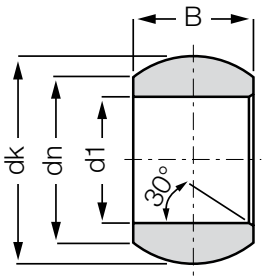

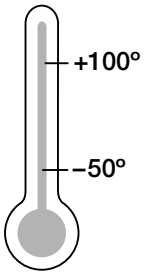

Order key

UWEM-16-13

- Dimension
- Inner diameter d1
- Metric
- Dimensional series E
- Spherical balls made of iglidur® UW

Dimensions [mm]

Part number	d1 E10	dn	dK	B	Weight [g]
UWEM-16-13	16.00	19.50	23.80	13.00	4.0
UWEM-20-16	20.00	24.00	28.80	16.00	6.5
UWEM-25-20	25.00	29.00	35.30	20.00	11.6
UWEM-30-22	30.00	34.00	40.50	22.00	15.2

delivery time from stock

prices price list online
www.igus.co.uk/en/uwem

igubal® Spherical Balls | Product Range

Clearance-free, single piece: J4VEM

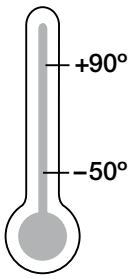

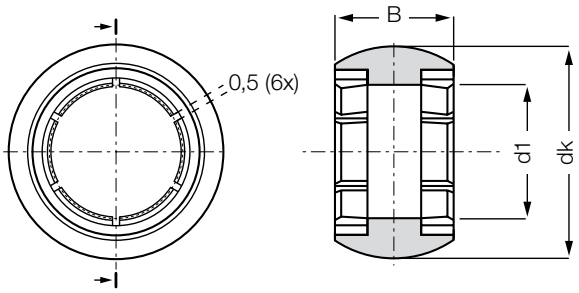

Order key

J4VEM-08-08

- Width
- Inner diameter d1
- Metric
- Dimensional series E
- Preloaded
- Material iglidur® J4

- Can be combined with all series E housings
- Sizes 8 to 20 mm
- Preloaded
- Totally clearance-free in unloaded state

Dimensions [mm]

Part number	d1 E10	dK	B	Weight [g]
J4VEM-08-08	8	13.20	8.00	0.7
J4VEM-10-09	10	16.10	9.00	1.2
J4VEM-12-10	12	18.10	10.00	1.5
J4VEM-16-13	16	24.10	13.00	3.7
J4VEM-20-16	20	29.10	16.00	6.2

5 Sizes available: Ø 8, 10, 12, 16, 20 mm combinable with:

igubal® Rod Ends EA(L)RM ▶ **page 648**
igubal® Rod Ends EB(L)RM ▶ **page 646**
igubal® Pillow Block Bearing ESTM ▶ **page 685**
igubal® Flange Bearing EFOM ▶ **page 694**
igubal® Flange Bearing EFSM ▶ **page 696**
igubal® Pivoting Bearing EGFM-T ▶ **page 715**
igubal® Pivoting Bearing EGLM ▶ **page 711**
igubal® Double Joint EGZM ▶ **page 716**

delivery time from stock

prices price list online
www.igus.co.uk/en/j4vem

igubal® Spherical Balls | Product Range

Spherical balls – detectable: RN248KM and RN248EM

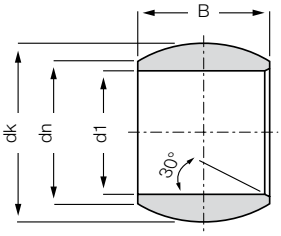

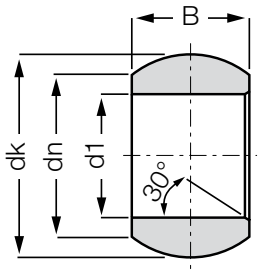

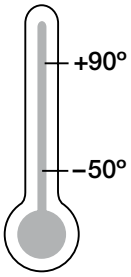

Order key

RN248...M-06-09

- Width B
- Inner diameter d1
- Metric
- Dimensional series
- K = Series K
- E = Series E
- Spherical balls made of iglidur® RN248

Dimensions [mm]

Part number	d1 E10	dn	dK	B	Weight [g]
RN248KM-06-09	6.00	8.90	12.80	9.0	1.0

Dimensions [mm]

Part number	d1 E10	dn	dK	B	Weight [g]
RN248EM-05-06	5.00	8.00	10.30	6.00	0.4
RN248EM-06-06	6.00	8.00	10.20	6.00	0.4
RN248EM-08-08	8.00	10.00	13.20	8.00	0.8
RN248EM-10-09	10.00	13.00	16.10	9.00	1.3
RN248EM-12-10	12.00	15.00	18.10	10.00	1.6

delivery time from stock

prices price list online
www.igus.co.uk/en/rn248km

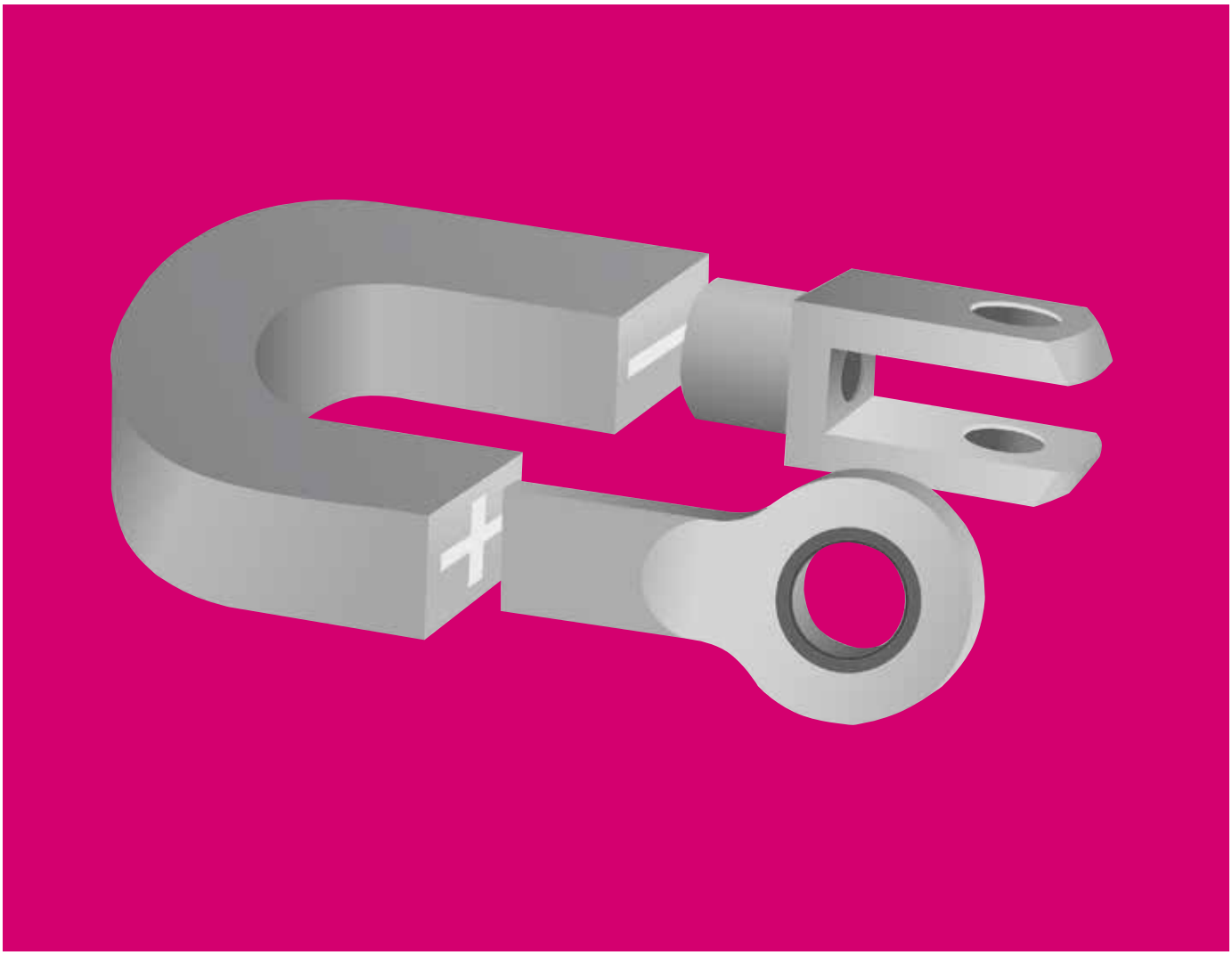

igubal® detectable

- Detectable
- Insensitive to dust and dirt
- Lubrication- and maintenance-free
- Vibration-dampening
- Light weight
- Corrosion-resistant

igubal® detectable

igubal® bearings can be found quickly in case of misuse or crash of the system through metal detectable material. Even the smallest fragment can be found by metal detectors.

Detectable

Insensitive to dust and dirt

Lubrication- and maintenance-free

Vibration-dampening

Light weight

When to use it?

- When particles should be detectable
- When maintenance-free materials are required
- If dimensional series K and E should be used
- If high pressure resistance is required
- If high elasticity is requested
- If high pressure resistance is required

When not to use it?

- If temperatures are higher than +80 °C
- If dimensions above 16 mm are necessary
- If rotation speeds higher than 0.5 m/s are required

Temperature

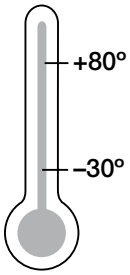

Product range

4 types
Ø 4–16 mm
more dimensions
on request

igubal® detectable | Product Overview

from stock

KBRM-…-CL-DT
KBLM-…-CL-DT
Series K
right/left
metric

▶ page 740

EBRM-…-DT
EBLM-…-DT
Series E
right/left
metric

▶ page 741

GERM-…-DT
GELM-…-DT
Series E
right/left
metric

▶ page 742

GEFM-DT

Series E
metric

▶ page 744

GERMF-…-DT
GELMF-…-DT
Series E
metric

▶ page 745

RN248KM
RN248EM
Series K, E
metric

▶ page 736

on request

Rod Ends

KARM-CL-DT

▶ page 644

EARM-DT

▶ page 648

KCRM-DT

▶ page 641

Pillow Block Bearings

ESTM-DT

▶ page 685

ESTM-SL-DT

▶ page 687

Flange Bearings

EFOM-DT

▶ page 694

EFSM-DT

▶ page 696

Pressfit Spherical Bearings

KGLM LC-DT

▶ page 707

KGLM SL-DT

▶ page 708

EGLM-DT

▶ page 711

ECLM-DT

▶ page 713

EGFM-T-DT

▶ page 715

EGZM-DT

▶ page 716

igubal® detectable | Product Range

Rod ends with female thread: KBRM-CL-DT and KBLM-CL-DT

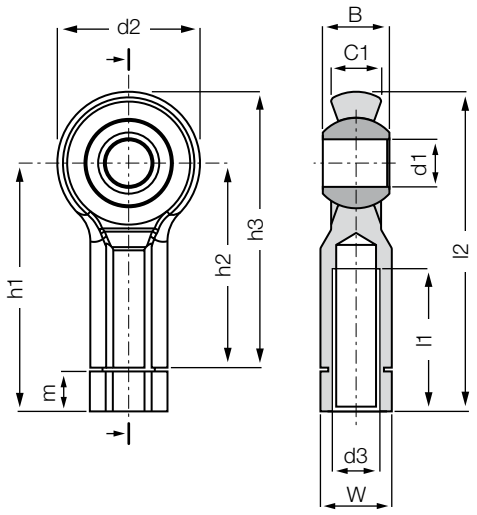

Order key

KB...M-06-CL-DT

- Detectable
- 2nd Generation
- Dimension
- Metric
- Thread
- L = left-hand thread
- R = right-hand thread
- Housing (female thread)
- Dimensional series K

- Smooth design has no dirt traps
- Compensation for shaft misalignment
- Light weight
- Excellent corrosion resistance
- Dimensional series K according to standard DIN ISO 12240

Material:
Housing: **RN246** ▶ **page 1129**
Spherical ball: **RN248KM** ▶ **page 736**

Dimensions [mm]

Part number		d1	d2	d3	W	B	C1	h3	h1	h2	l1	l2	m	max.
Right-hand thread	Left-hand thread	E10												pivot angle
KBRM-06-CL-DT	**KBLM-06-CL-DT**	6	20	M06	SW10	9	7	40	36.5	30	20	46.5	5.7	40°

delivery time **from stock**

prices **price list online**
www.igus.co.uk/en/kbrm-cl-dt

igubal® detectable | Product Range

Rod ends with female thread: EBRM-DT and EBLM-DT

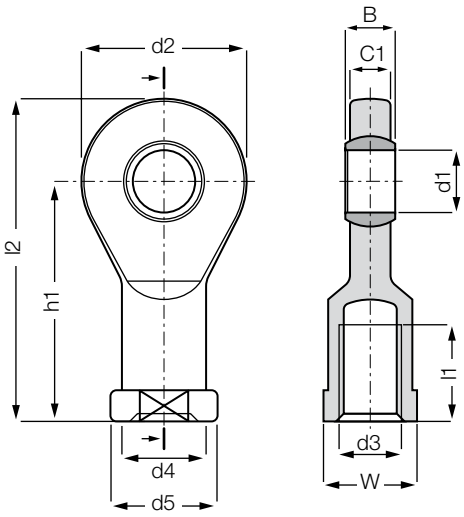

Order key

EB...M-04-DT

- Detectable
- Dimension
- Metric
- Thread
- L = left-hand thread
- R = right-hand thread
- Housing (female thread)
- Dimensional series E

- Smooth design has no dirt traps
- Clip in ball
- Compensation for shaft misalignment
- Light weight
- Excellent corrosion resistance

Material:
Housing: **RN246** ▶ **page 1129**
Spherical ball: **RN248EM** ▶ **page 736**

Dimensions [mm]

Part number		d1	d2	d3	d4	d5	C1	B	h1	l1	l2	W	max.
		E10											pivot angle
Right-hand thread	Left-hand thread												
EBRM-04-DT	**EBLM-04-DT**	4	15	M04	–	–	3.5	5	22.5	9.5	30.0	SW08	33°
EBRM-05-DT	**EBLM-05-DT**	5	19	M05	9.0	11	4.4	6	30	12	39.5	SW09	33°
EBRM-06-DT	**EBLM-06-DT**	6	21	M06	11.0	13	4.4	6	30	8	40.5	SW11	27°
EBRM-08-DT	**EBLM-08-DT**	8	24	M08	13.0	16	6.0	8	36	14	48.0	SW14	24°
EBRM-10-DT	**EBLM-10-DT**	10	29	M10	15.0	19	7.0	9	43	18	57.5	SW17	24°
EBRM-12-DT	**EBLM-12-DT**	12	34	M12	18.0	22	8.0	10	50	20	67.0	SW19	21°

delivery time from stock

prices price list online
www.igus.co.uk/en/ebrm-cl-dt

igubal® detectable | Product Range

Clevis joint, detectable: GERM-DT and GELM-DT

- Detectable
- Insensitive to dust and dirt
- Maintenance-free and lubricant-free
- Vibration dampening
- Light weight

Technical Data

Part number		Max. static tensile strength		Max. static radial load		Weight
		Short term	Long term	Short term	Long term	
Right-hand thread	Left-hand thread	[N]	[N]	[N]	[N]	[g]
GERM-04-DT	GELM-04-DT	455	227.5	175	87.5	0.9
GERM-05-DT	GELM-05-DT	840	420	175	87.5	2.7
GERM-06-DT	GELM-06-DT	980	490	210	105	2.5
GERM-08-DT	GELM-08-DT	1,890	945	455	227.5	6.3
GERM-10-DT	GELM-10-DT	3,290	1,645	560	280	13.2
GERM-10-DT-F	GELM-10-DT-F	3,290	1,645	560	280	13.2
GERM-12-DT	GELM-12-DT	3,990	1,995	630	315	20.2
GERM-12-DT-F	GELM-12-DT-F	3,990	1,995	630	315	20.2

delivery time from stock

prices price list online
www.igus.co.uk/en/germ-dt

igubal® detectable | Product Range

Clevis joint, detectable: GERM-DT and GELM-DT

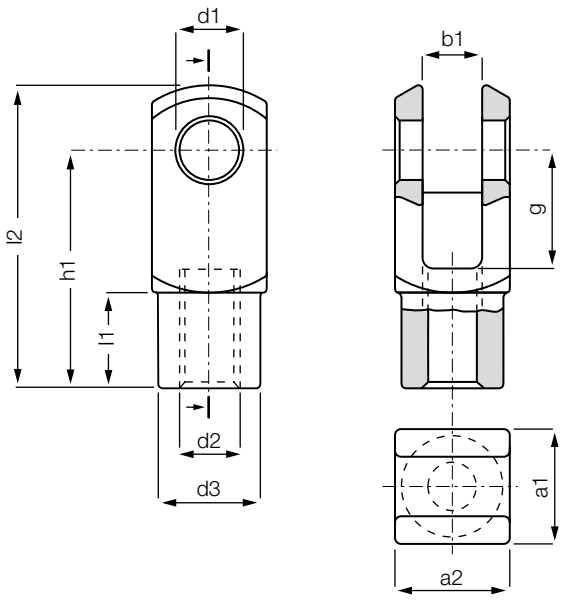

Order key

GE…M-04-DT

- Detectable
- Dimension
- Metric
- Thread
- L = left-hand thread
- R = right-hand thread
- Dimensional series E
- Clevis joint

Material:
RN246 ▶ page 1129

Dimensions [mm]

Part number		d1	g	a1	a2	b1	d2	d3	l2	h1	l1
		H9	h11	+0.3 −0.16	+0.3 −0.16	B13	Thread tolerance 6H	+0.3 −0.3	+0.5 −0.5	+0.3 −0.3	+0.2 −0.2
Right-hand thread	Left-hand thread										
GERM-04-DT	GELM-04-DT	4	8	8	8	4	M04	8.0	21.0	16.0	6.0
GERM-05-DT	GELM-05-DT	5	12	12	12	6	M05	10.0	30.6	24.0	9.0
GERM-06-DT	GELM-06-DT	6	12	12	12	6	M06	10.0	30.6	24.0	9.0
GERM-08-DT	GELM-08-DT	8	16	16	16	8	M08	14.0	41.6	32.0	12.0
GERM-10-DT	GELM-10-DT	10	20	20	20	10	M10	18.0	51.3	40.0	15.0
GERM-10-DT-F	GELM-10-DT-F	10	20	20	20	10	M10 x 1.25	18.0	51.3	40.0	15.0
GERM-12-DT	GELM-12-DT	12	24	24	24	12	M12	20.0	61.3	48.0	18.0
GERM-12-DT-F	GELM-12-DT-F	12	24	24	24	12	M12 x 1.25	20.0	61.3	48.0	18.0

delivery time from stock

prices price list online
www.igus.co.uk/en/germ-dt

igubal® detectable | Product Range

Spring loaded pin, detectable: GEFM-DT

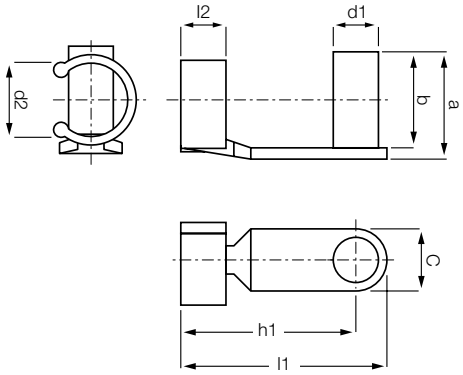

Order key

GEFM-04-DT

- detectable
- Dimension
- Metric
- Spring loaded pin
- Dimensional series E
- Clevis joint

- Detectable
- Insensitive to dust and dirt
- Maintenance-free and lubricant-free
- Vibration dampening
- Light weight

Material:
RN246 ▶ page 1129

Dimensions [mm]

Part number	d1	d2	a	b	c	l1 ±0.5	h1	l2	Weight [g]
GEFM-04-DT	4	8	9.5	10.5	8	19	15	4.5	0.5
GEFM-05-DT	5	10	14	15.5	8	27	23	6.5	1.1
GEFM 06-DT	6	10	14	15.5	8	27	23	6.5	1.2
GEFM-08-DT	8	14	19	21.0	11	35.5	30	8.0	2.8
GEFM-10-DT	10	18	23	25.5	14	45	38	10.0	5.0
GEFM-12-DT	12	20	28	31.0	16	53	45	12.0	8.3

delivery time from stock

prices price list online
www.igus.co.uk/en/gefm-dt

igubal® detectable | Product Range

Clevis joints with spring loaded pins, detectable: GERMF-DT and GELMF-DT

- Detectable
- Insensitive to dust and dirt
- Maintenance-free and lubricant-free
- Vibration dampening
- Light weight

Order key

GE...MF-04-DT

- detectable
- Dimension
- Spring loaded pin
- Metric
- Thread
- L = left-hand thread
- R = right-hand thread
- Dimensional series E
- Clevis joint

Material:
RN246 ▶ page 1129

Technical Data

Part number		Max. static tensile strength		Max. static radial load		Weight
		Short term	Long term	Short term	Long term	
Right-hand thread	Left-hand thread	[N]	[N]	[N]	[N]	[g]
GERMF-04-DT	GELMF-04-DT	350	175	175	87.5	1.3
GERMF-05-DT	GELMF-05-DT	630	315	175	87.5	3.8
GERMF-06-DT	GELMF-06-DT	910	455	210	105	3.9
GERMF-08-DT	GELMF-08-DT	1,470	735	455	227.5	9.1
GERMF-10-DT	GELMF-10-DT	2,100	1,050	560	280	18.2
GERMF-10-DT-F	GELMF-10-DT-F	2,100	1,050	560	280	18.2
GERMF-12-DT	GELMF-12-DT	2,450	1,225	630	315	28.6
GERMF-12-DT-F	GELMF-12-DT-F	2,450	1,225	630	315	28.6

Individual components: Clevis joint GERM-DT and Spring loaded pin GEFM-DT
▶ page 742 and 744

delivery time from stock

prices price list online
www.igus.co.uk/en/germf-dt